Av DVP/DVK 595x595/315

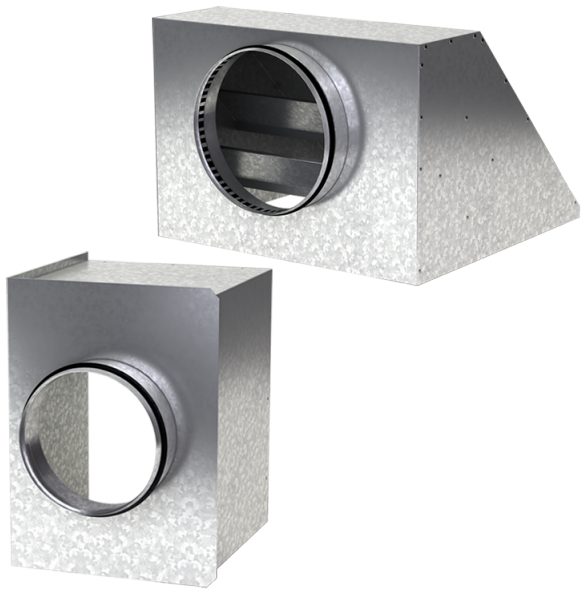

For connection of the square ceiling diffusers DVP and DVK to round air ducts

- Casing material: Galvanized steel

	Unit of measurement	Av DVP/DVK 595x595/315
Connected air duct size	mm	315
Weight	kg	4.47

Dimensions

a	b	ØD	K
592.6	592.6	315	305.5

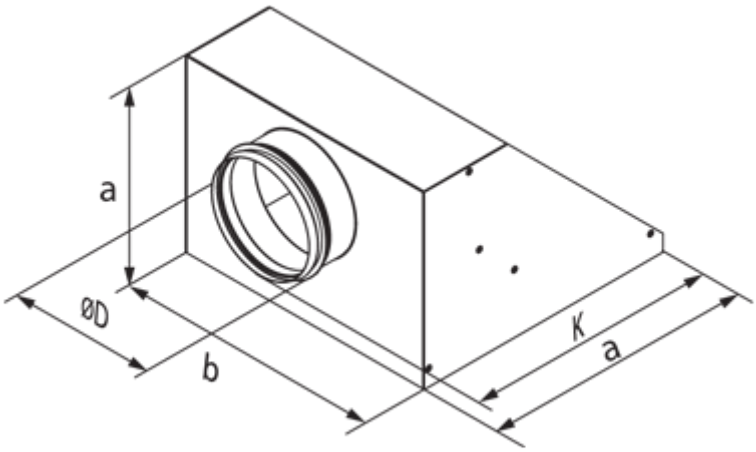
a
ØD
b
K
a