Av DVP/DVK 620x620/250

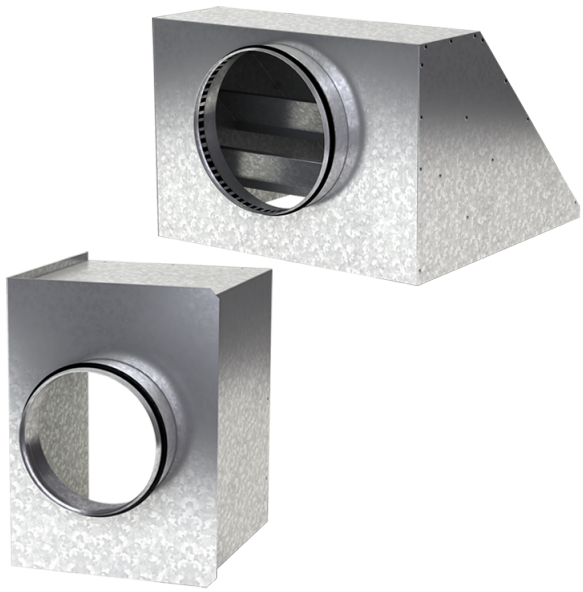

For connection of the square ceiling diffusers DVP and DVK to round air ducts

- Casing material: Galvanized steel

	Unit of measurement	Av DVP/DVK 620x620/250
Connected air duct size	mm	250
Weight	kg	4.81

Dimensions

a	b	ØD	K
617.6	617.6	250	305.5

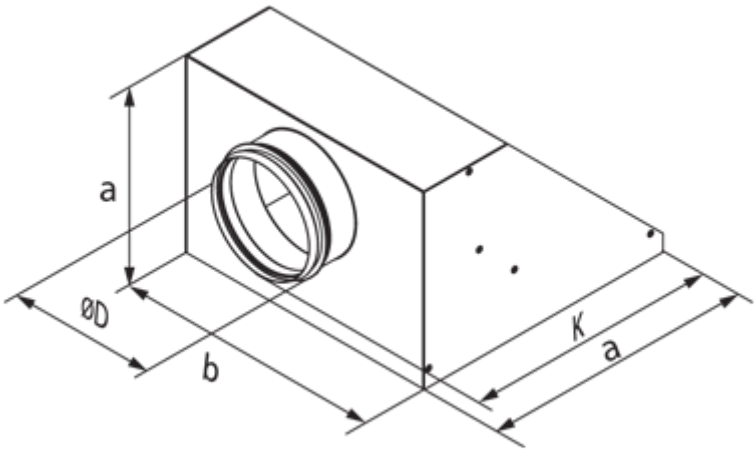
a
ØD
b
K
a