Av DVP/DVK 695x695/315

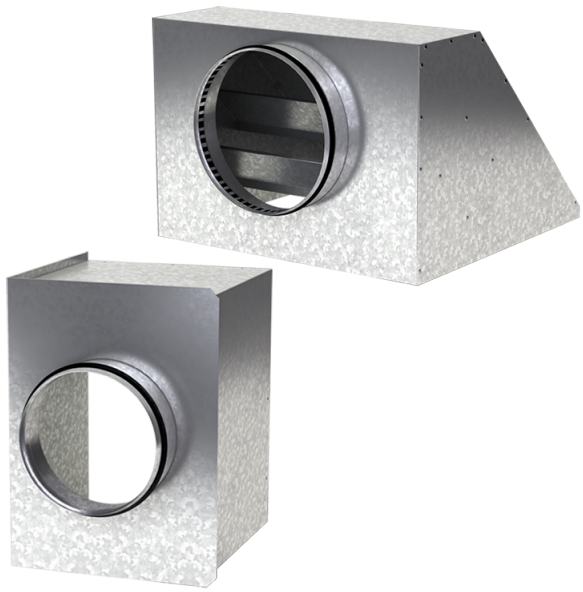

For connection of the square ceiling diffusers DVP and DVK to round air ducts

- Casing material: Galvanized steel

	Unit of measurement	Av DVP/DVK 695x695/315
Connected air duct size	mm	315
Weight	kg	5.56

Dimensions

a	b	ØD	K
692.6	692.6	315	305.5

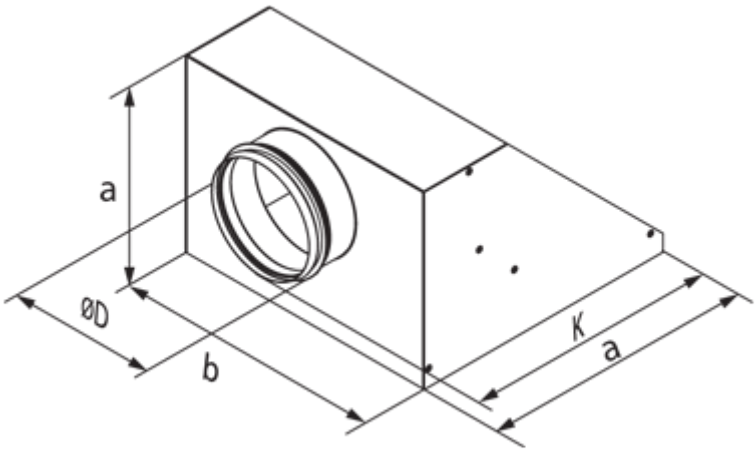
a
ØD
b
K
a