Belimo LM24A

The actuators are designed for controlling air dampers with cross section up to 1 m²



	Unit of measurement	Belimo LM24A
Phases	-	1
Minimum supply voltage	V	24
Maximum supply voltage	V	24
Power supply frequency	Hz	50/60
Rated power	W	1
Weight	kg	0.6
Ambient air temperature min	°C	-30
Ambient air temperature max	°C	50
Ingress protection rating	-	IP54

Dimensions

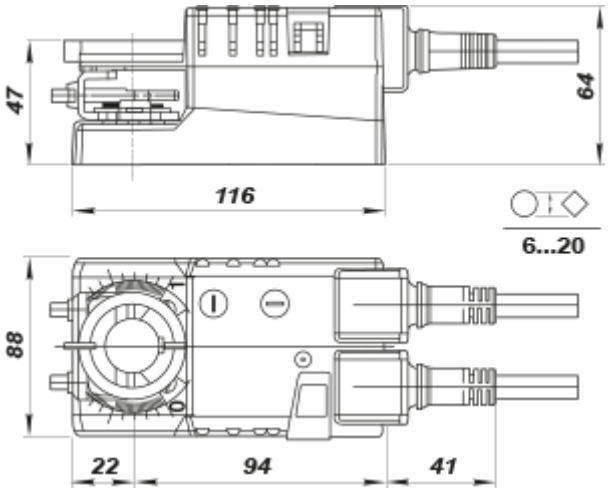
47
64
116
6...20
88
22
94
41