# Boost 200 Un



Mixed-flow inline fans

- Sound pressure level LpA at 3 m: 42
- Control: Speed controller
- Impeller type: Mixed-flow
- Casing material: Polypropylene
- Installation in any position
- Temperature sensor: Remote

| | Unit of measurement | Boost 200 Un | | |
|---|---|---|---|---|
| Speed | - | 1 | 2 | 3 |
| Connected air duct size | mm | 200 | | |
| Phases | - | 1 | | |
| Minimum supply voltage | V | 230 | | |
| Maximum supply voltage | V | 230 | | |
| Power supply frequency | Hz | 50 | | |
| Rated power | W | 82 | 101 | 113 |
| Unit current | A | 0.37 | 0.45 | 0.51 |
| Maximum airflow | m³/h | 752 | 978 | 1140 |
| Rotation speed at 50hz | - | 1866 | 2400 | 2738 |
| Sound pressure level LpA at 3 m | dB(A) | 37 | 40 | 42 |
| Weight | kg | 4.2 | | |
| Transported air temperature (max) | °C | 55 | | |
| Transported air temperature (min) | °C | -25 | | |
| Ingress protection rating | - | IPX4 | | |
| Ingress protection rating of the drive | - | IP20 | | |
| Impeller material | - | Plastic | | |

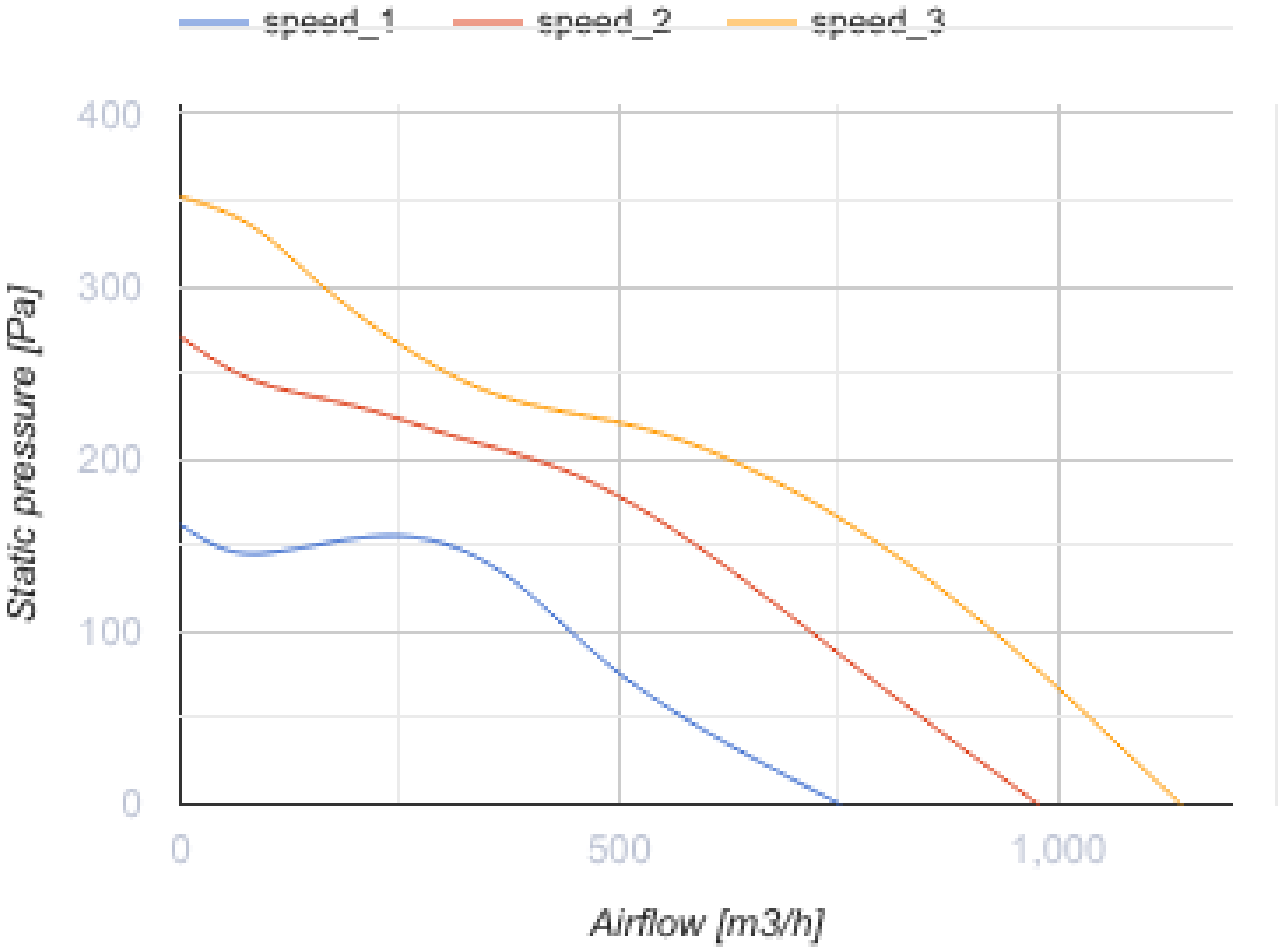
speed_1
speed_2
speed_3
400
300
200
100
0
Static pressure [Pa]
0
500
1,000
Airflow [m3/h]

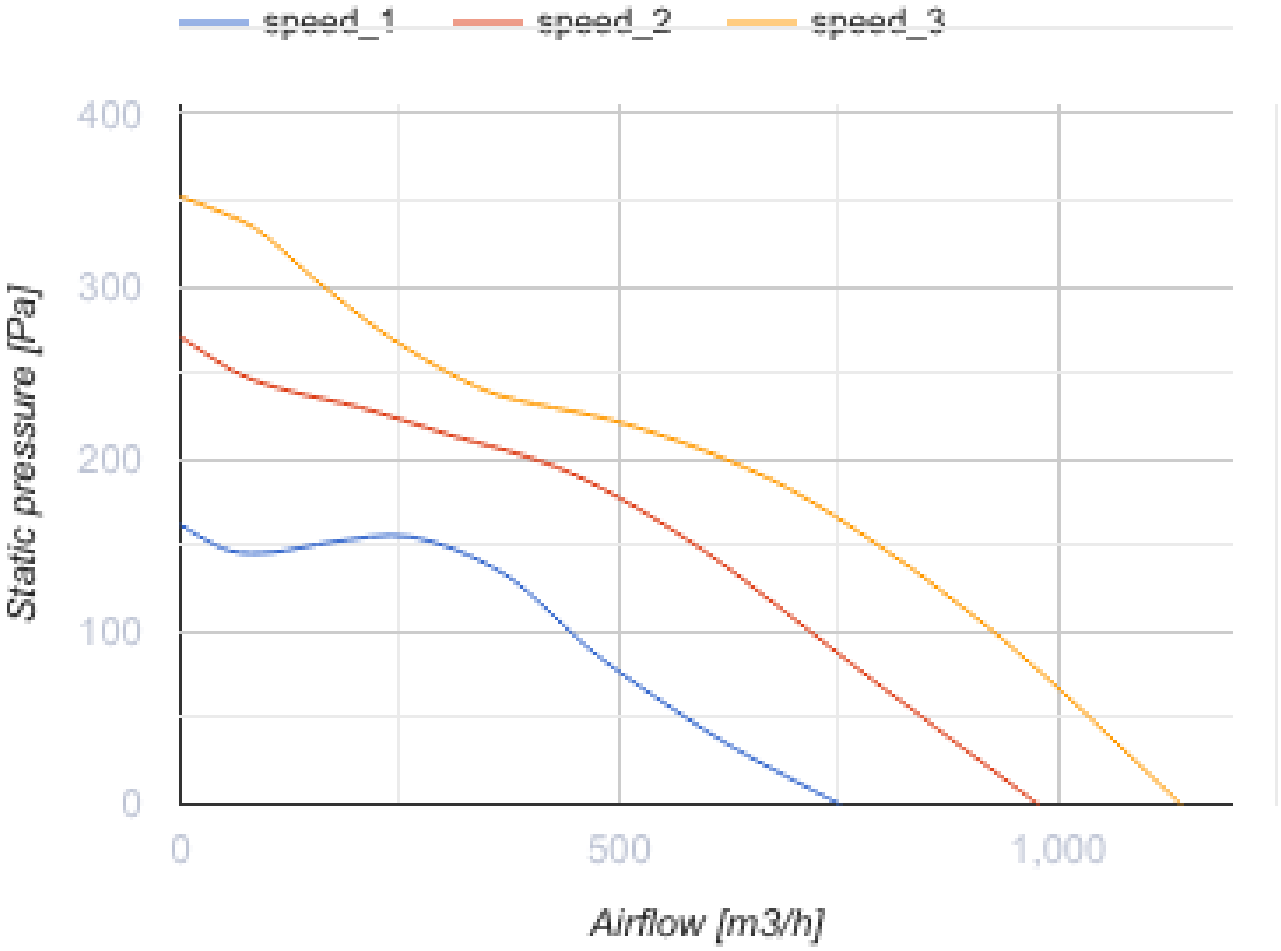
speed_1
speed_2
speed_3
400
300
200
100
0
Static pressure [Pa]
0
500
1,000
Airflow [m3/h]

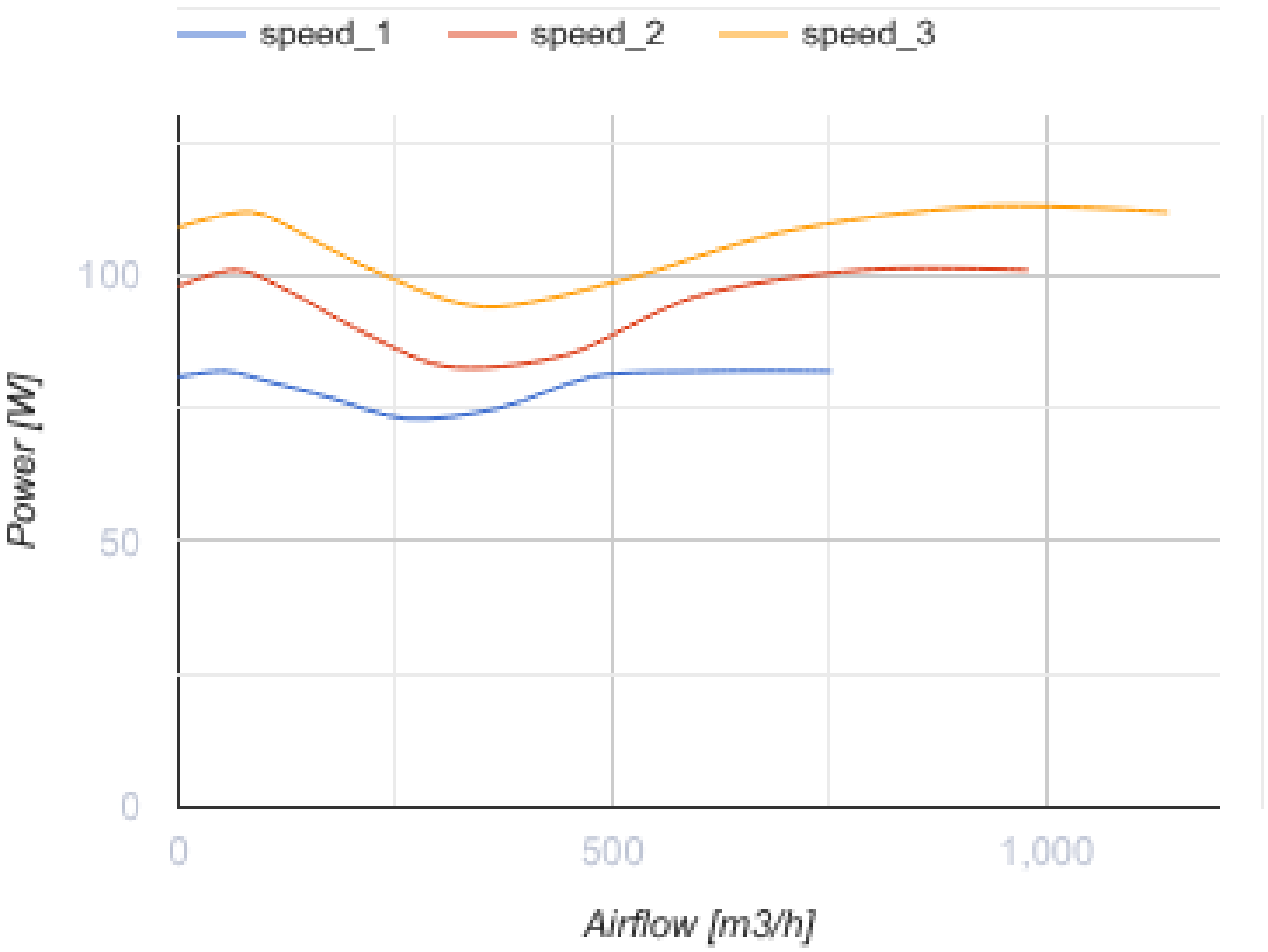
speed_1
speed_2
speed_3
100
50
0
Power [W]
0
500
1,000
Airflow [m3/h]

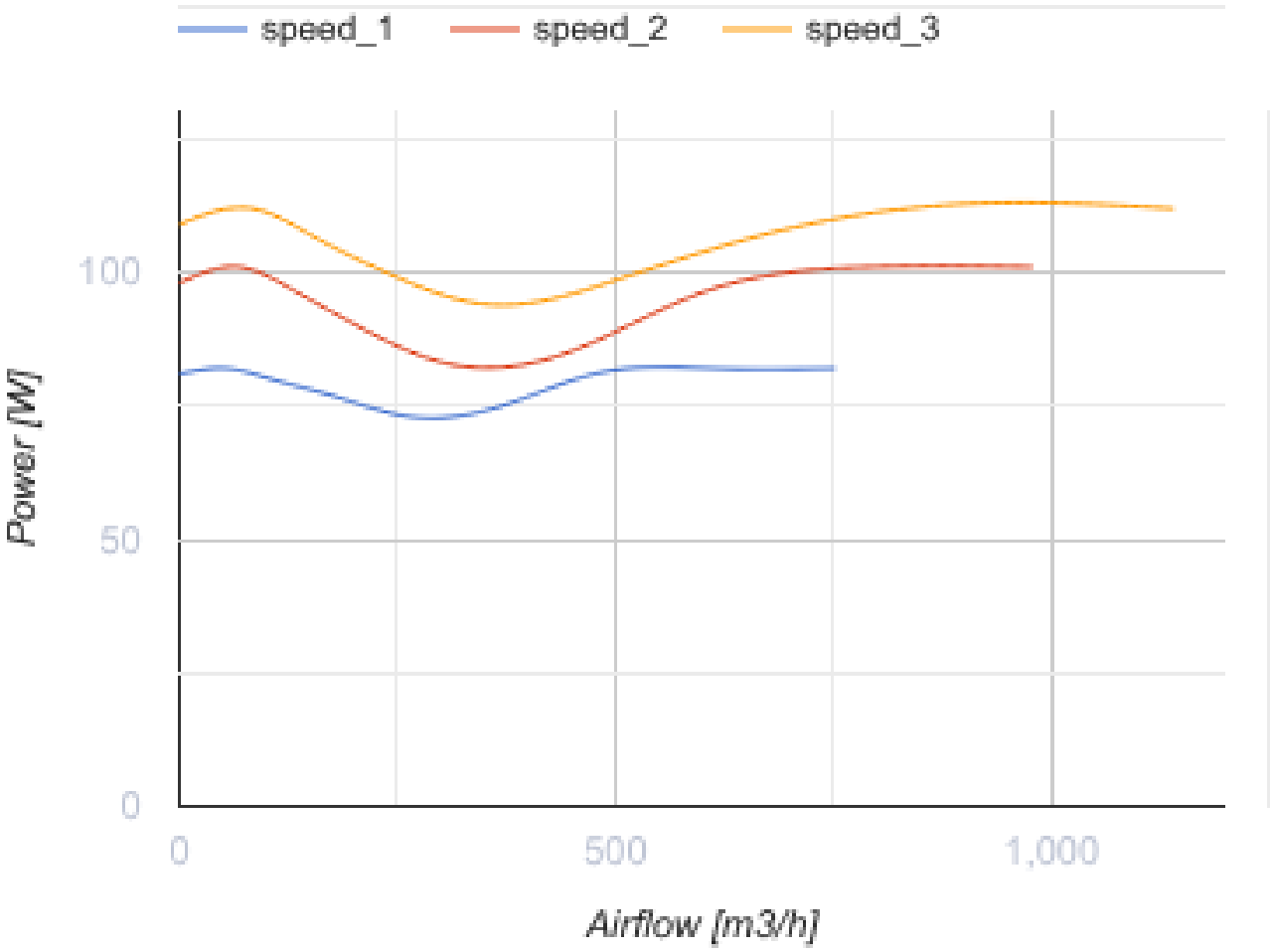


## Dimensions

| A | B | C | D |
|---|---|---|---|
| 328 | 302 | 293 | 200 |

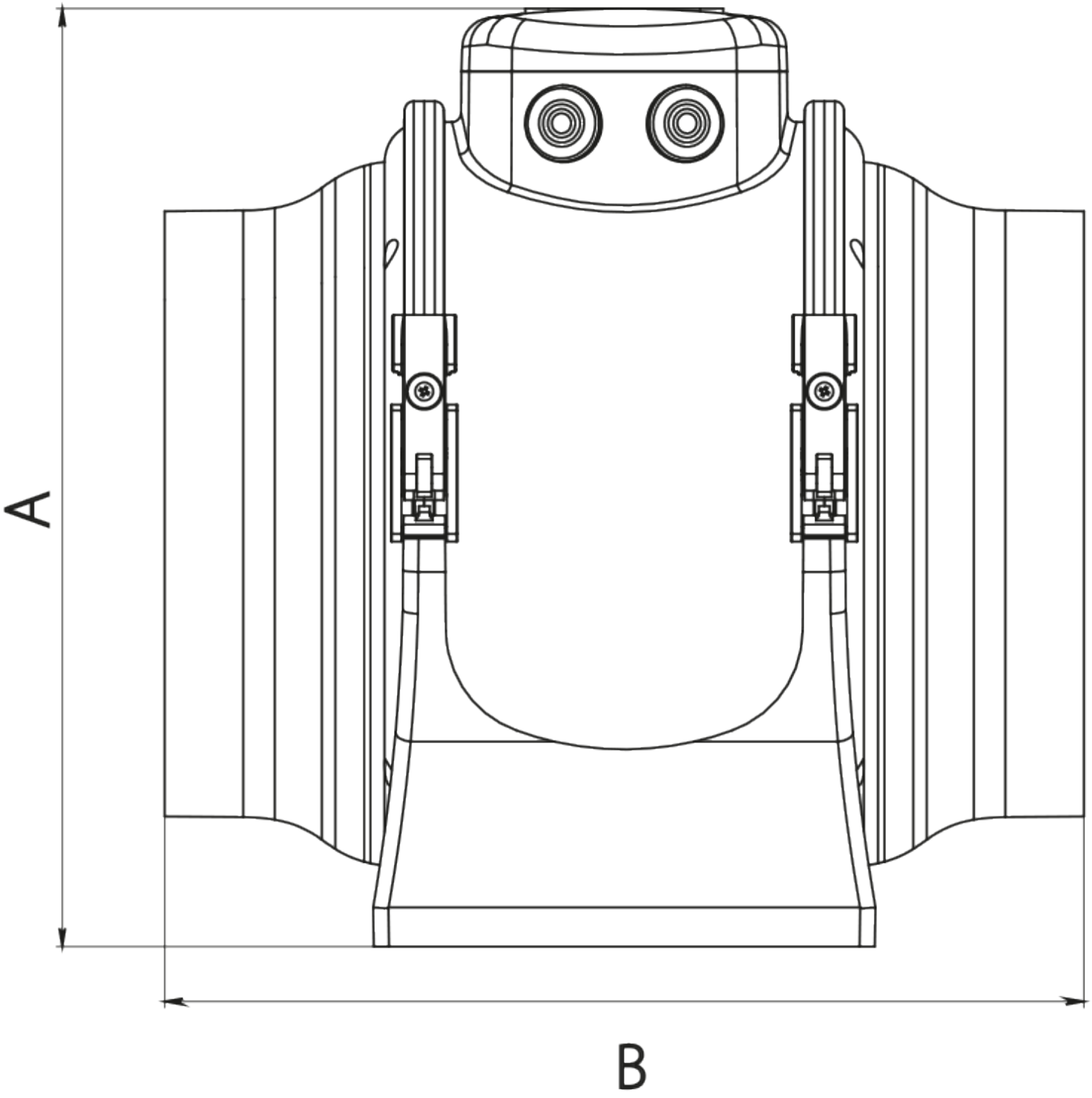
A
B

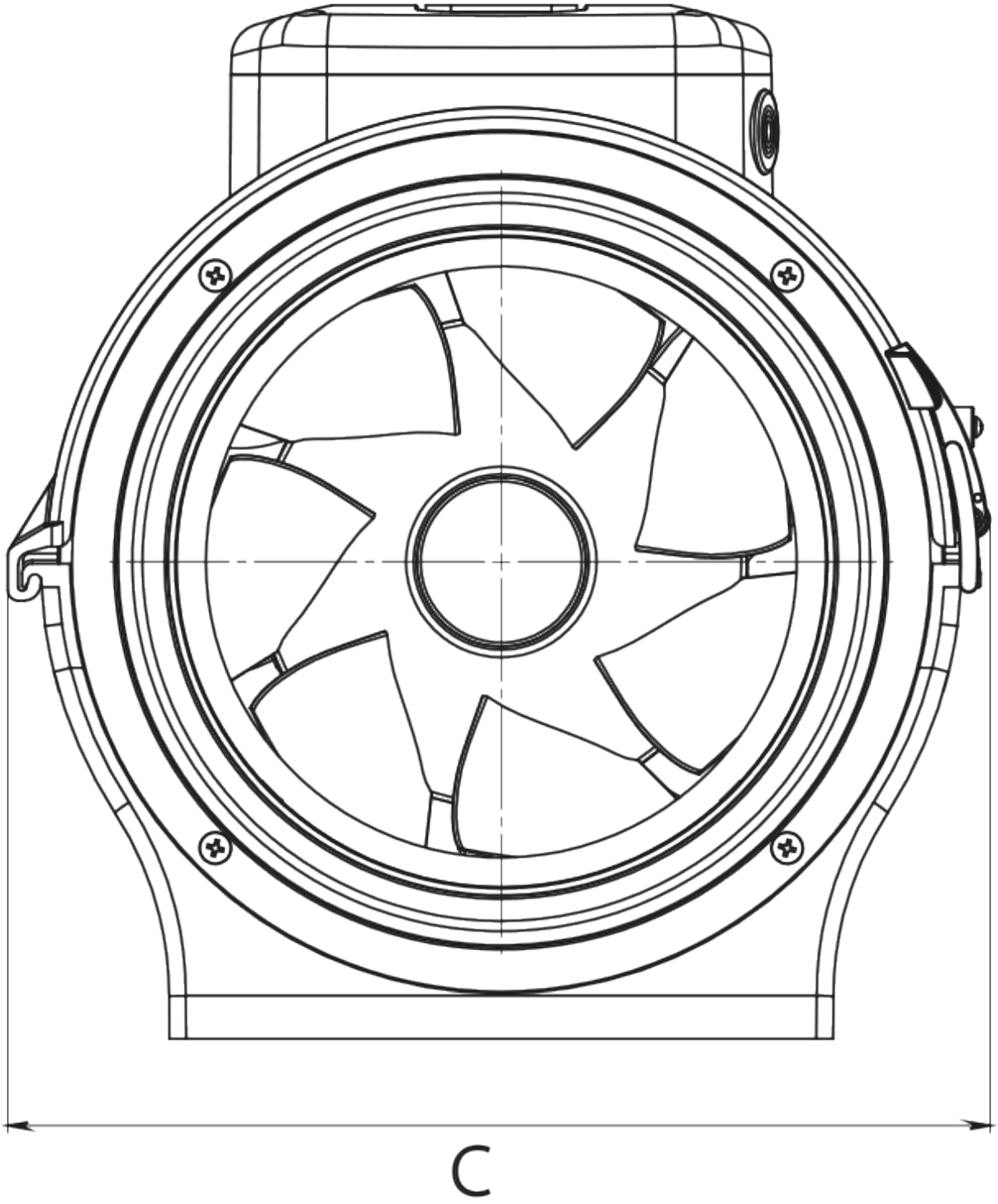
C

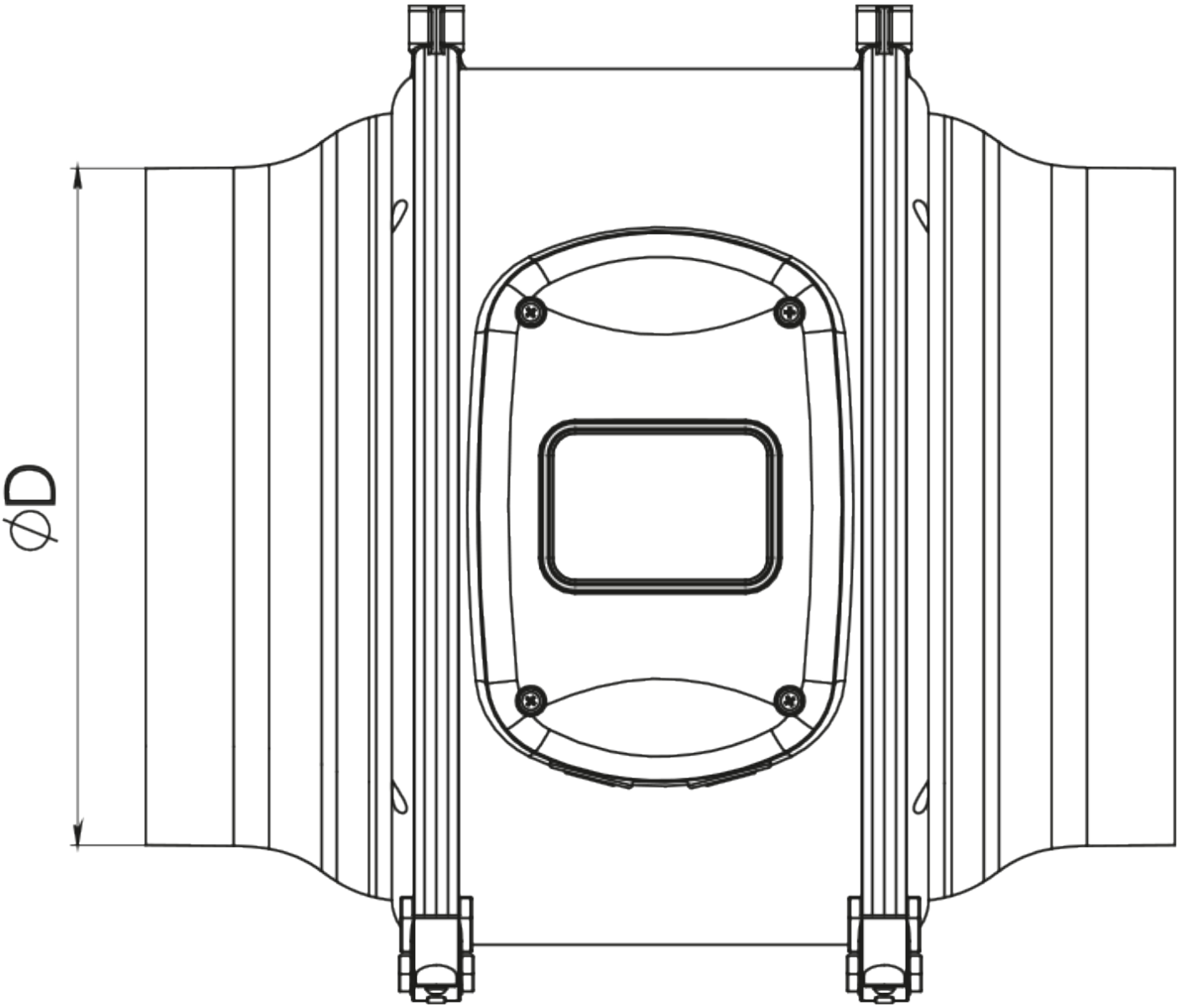


## Accessories

### For round ducts

| Name | Photo | Description |
|---|---|---|

| | | |
|---|---|---|
| SR 200/600 |  | Silencers made of galvanized steel filled with non-combustible sound-absorbing material |
| SR 200/900 |  | Silencers made of galvanized steel filled with non-combustible sound-absorbing material |
| SR 200/1200 |  | Silencers made of galvanized steel filled with non-combustible sound-absorbing material |
| SRF 200/600 |  | Silencers made of aluminium alloy filled with non-combustible sound-absorbing material |
| SRF 200/900 |  | Silencers made of aluminium alloy filled with non-combustible sound-absorbing material |
| SRF 200/2000 |  | Silencers made of aluminium alloy filled with non-combustible sound-absorbing material |
| SRP 200/500 |  | Silencers with an internal flexible air duct made of micro-perforated aluminium foil laminated with polyester film |
| SRP 200/600 |  | Silencers with an internal flexible air duct made of micro-perforated aluminium foil laminated with polyester film |
| SRP 200/750 |  | Silencers with an internal flexible air duct made of micro-perforated aluminium foil laminated with polyester film |
| SRP 200/900 |  | Silencers with an internal flexible air duct made of micro-perforated aluminium foil laminated with polyester film |
| SRP 200/1200 |  | Silencers with an internal flexible air duct made of micro-perforated aluminium foil laminated with polyester film |
| SRP 200/1500 |  | Silencers with an internal flexible air duct made of micro-perforated aluminium foil laminated with polyester film |
| SRP 200/2000 |  | Silencers with an internal flexible air duct made of micro-perforated aluminium foil laminated with polyester film |

### For round ducts

| Name | Photo | Description |
|---|---|---|
| FB K2 200 G4/F8 |  | Panel filters of a high purification level |

| | | |
|---|---|---|
| FB K2 200 G4/C/F8 |  | Panel filters of a high purification level |
| FB K2 200 G4/H13 |  | Panel filters of a high purification level |
| FB K2 200 G4/C/H13 |  | Panel filters of a high purification level |
| FB K2 200 ES |  | Panel electrostatic filters of a high purification level |
| FB K2 200 G4/F8 UV | 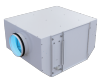 | Filter boxes with a high purification level and air disinfection |
| FB K2 200 G4/C/F8 UV | 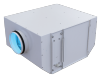 | Filter boxes with a high purification level and air disinfection |
| FB K2 200 G4/H13 UV | 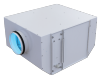 | Filter boxes with a high purification level and air disinfection |
| FB K2 200 G4/C/H13 UV | 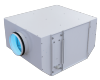 | Filter boxes with a high purification level and air disinfection |
| FB K2 200 UV | 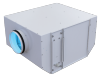 | Filter boxes with a high purification level and air disinfection |
| FB 200 |  | Round panel air filters |
| FBV 200 |  | Round panel air filters with a large filtration area |
| FBK 200-4 |  | Round bag air filters |
| FBK 200-5 | 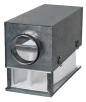 | Round bag air filters |
| FBK 200-7 |  | Round bag air filters |

### For round ducts

| Name | Photo | Description |
|---|---|---|

| | | |
|---|---|---|
| KOM 200 |  | Backdraught damper with spring-loaded plates for shutting off air flow in round air ducts |
| KOMu 200 |  | Backdraught damper with spring-loaded plates for shutting off air flow in round air ducts |
| KOM1 200 |  | Backdraught gravity damper for shutting off air flow in round air ducts |
| KR 200 |  | Air dampers for controlling air flow in round air ducts |
| KRV 200 |  | Air dampers for automatic air flow control in round ducts |

### For round ducts

| Name | Photo | Description |
|---|---|---|
| VVG 200 | 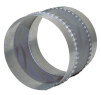 | Flexible anti-vibration inserts for round ducts |
| VVGF 200 |  | Flexible anti-vibration inserts with flanges for round air ducts |

### Water heaters

| Name | Photo | Description |
|---|---|---|
| NKV 200-2 |  | Inline water supply air heaters or heater for air handling units with a round cross-section |
| NKV 200-4 |  | Inline water supply air heaters or heater for air handling units with a round cross-section |

### Electrical heaters

| Name | Photo | Description |
|---|---|---|
| NK 200-1,2-1 |  | Round electric inline heaters with round cross-section |
| NK 200-1,7-1 |  | Round electric inline heaters with round cross-section |
| NK 200-2,0-1 |  | Round electric inline heaters with round cross-section |

| | | |
|---|---|---|
| NK 200-2,4-1 |  | Round electric inline heaters with round cross-section |
| NK 200-3,4-1 |  | Round electric inline heaters with round cross-section |

### Thyristor speed controllers

| Name | Photo | Description |
|---|---|---|
| RS-1-400 |  | Speed controller |
| RS-3,0-T |  | Applied in ventilation systems for speed switching ON/OFF and speed control of single-phase power-controlled motors |
| RS-5,0-T |  | Applied in ventilation systems for speed switching ON/OFF and speed control of single-phase power-controlled motors |
| RS-10,0-T |  | Applied in ventilation systems for speed switching ON/OFF and speed control of single-phase power-controlled motors |

### Speed controllers

| Name | Photo | Description |
|---|---|---|
| RS-1,5-PS |  | Used in ventilation systems for switching on/off and speed control of single-phase fan motors with voltage control |
| RS-2,5-PS |  | Used in ventilation systems for switching on/off and speed control of single-phase fan motors with voltage control |
| RS-4,0-PS |  | Used in ventilation systems for switching on/off and speed control of single-phase fan motors with voltage control |

### Speed control switches

| Name | Photo | Description |
|---|---|---|

## Ecodesign

| Trademark | Vents |
|---|---|
| Model | Boost 200 Un |
| Type of drive installed | Integrated VSD |
| Type of heat recovery system | None |
| Nominal external pressure (Pa) | 183 |
| Maximum external leakage rates (%) | 2.7 |
| Static efficiency (%) | 33.3 |
| Declared typology | NRVU UVU |
| Effective electric power input (kW) | 0.108 |
| Sound power level (dB(A)) | 70 |