Boost 355 EC S



Mixed-flow inline fans with EC-motors

- Sound pressure level LpA at 3 m: 60
- Impeller type: Mixed-flow
- Casing material: Polypropylene
- Installation in any position

	Unit of measurement	Boost 355 EC S
Connected air duct size	mm	355
Phases	-	1
Minimum supply voltage	V	230
Maximum supply voltage	V	230
Power supply frequency	Hz	50/60
Rated power	W	701
Unit current	A	3.1
Maximum airflow	m³/h	4630
Rotation speed at 50hz	-	3175
Sound pressure level LpA at 3 m	dB(A)	60
Transported air temperature (max)	°C	55
Transported air temperature (min)	°C	-25
Ingress protection rating	-	IPX4
Ingress protection rating of the drive	-	IP44
Impeller material	-	Plastic

Dimensions

ØD	ØD1	A	H
350	390	388	450

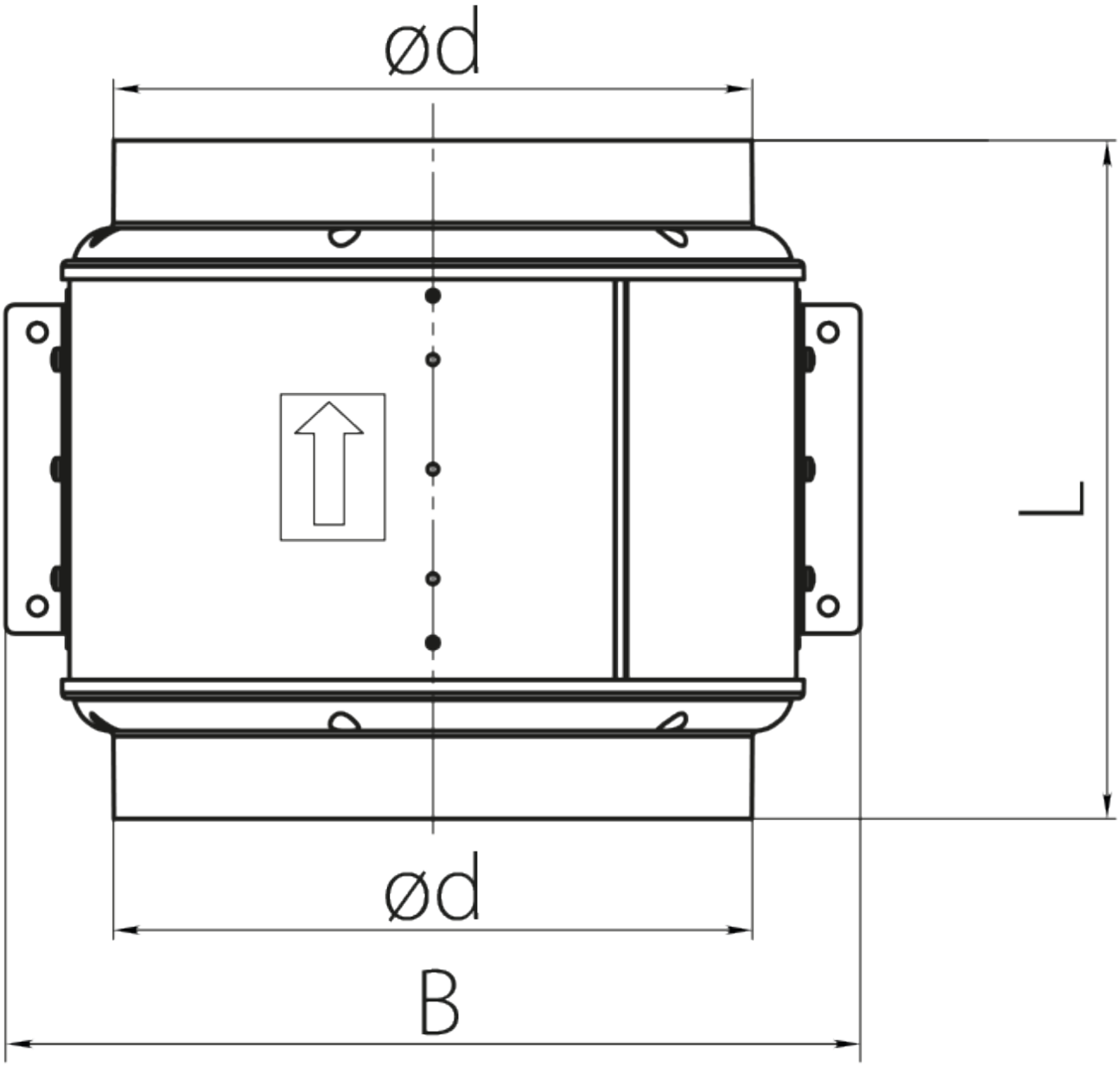

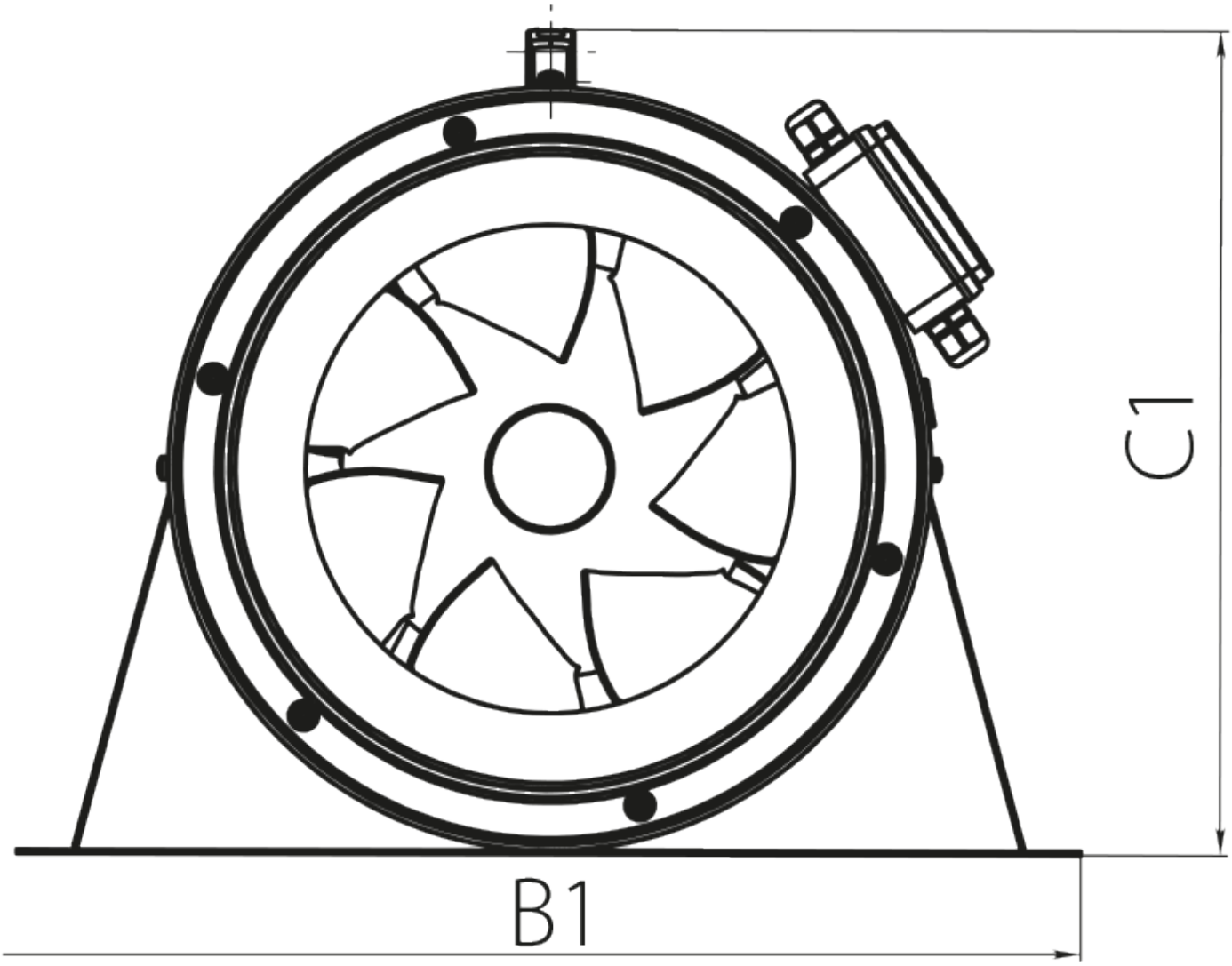
C1
B1

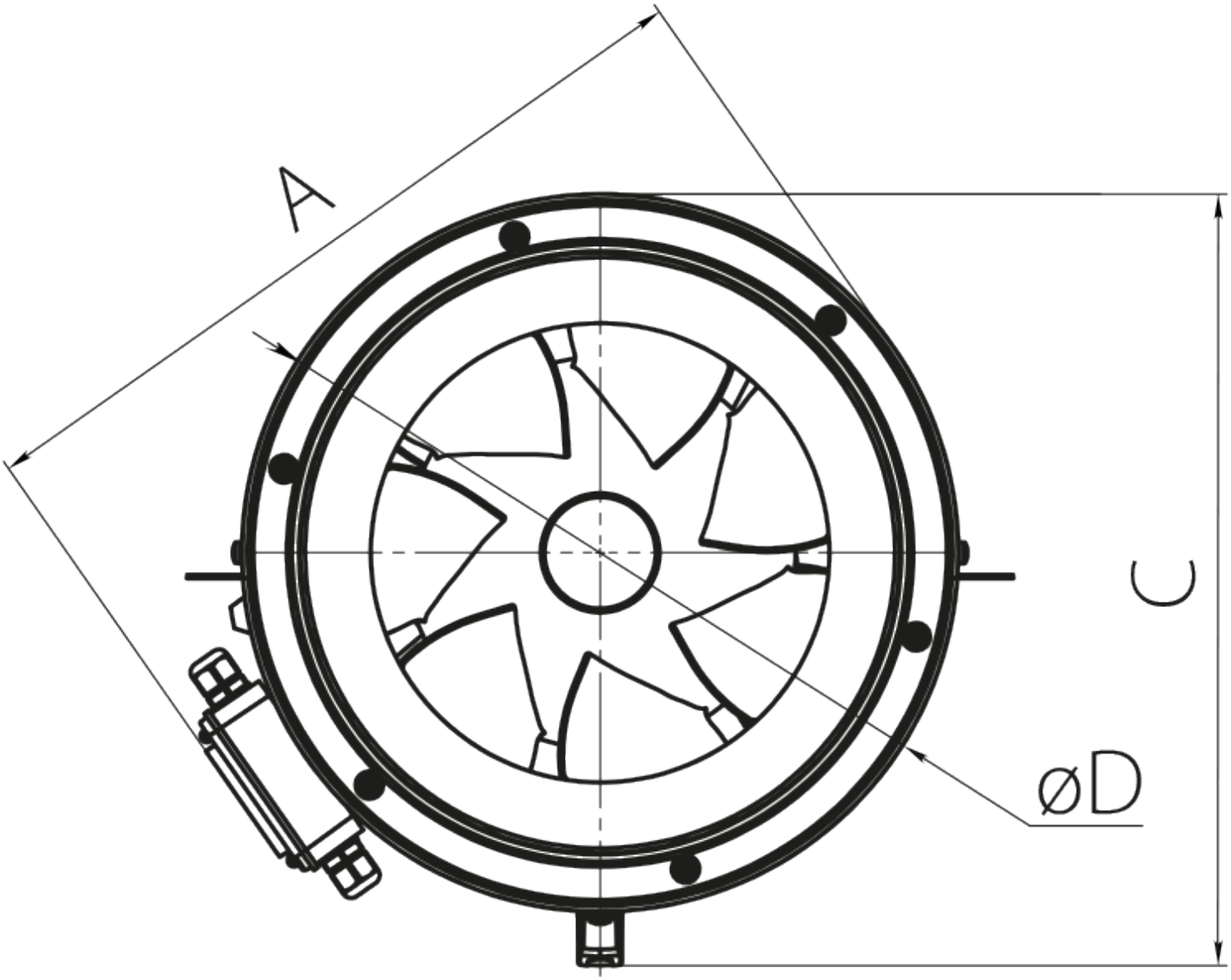

Accessories

For round ducts

Name	Photo	Description

SR 355/600		Silencers made of galvanized steel filled with non-combustible sound-absorbing material
SR 355/900		Silencers made of galvanized steel filled with non-combustible sound-absorbing material
SR 355/1200		Silencers made of galvanized steel filled with non-combustible sound-absorbing material

For round ducts

Name	Photo	Description
KOM1 355		Backdraught gravity damper for shutting off air flow in round air ducts
KR 355		Air dampers for controlling air flow in round air ducts
KRV 355		Air dampers for automatic air flow control in round ducts

For round ducts

Name	Photo	Description
VVG 355	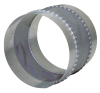	Flexible anti-vibration inserts for round ducts

Ecodesign

Trademark	Vents
Model	Boost 355 EC S
Type of drive installed	Integrated VSD
Type of heat recovery system	None
Nominal external pressure (Pa)	300
Maximum external leakage rates (%)	2.7
Static efficiency (%)	47.8
Sound power level (dB(A))	80
Effective electric power input (kW)	0.701
Declared typology	NRVU UVU