CBF 200



Ceiling-mounted centrifugal high-resistance fans for extract ventilation

- Sound pressure level LpA at 3 m: 27
- Casing material: Galvanized steel
- Backdraft protection: Backdraft damper

	Unit of measurement	CBF 200	
Connected air duct size	mm	150/100	
Phases	-	1	
Maximum supply voltage	V	240	
Minimum supply voltage	V	220	
Power supply frequency	Hz	50	60
Rated power	W	20	29
Unit current	A	0.1	0.13
Maximum airflow	m^3/h	130	210
Sound pressure level LpA at 3 m	dB(A)	24	27
Weight	kg	5.3	
Ambient air temperature max	°C	40	
Ambient air temperature min	°C	1	
Ingress protection rating	-	IPX2	
Impeller material	-	Plastic	

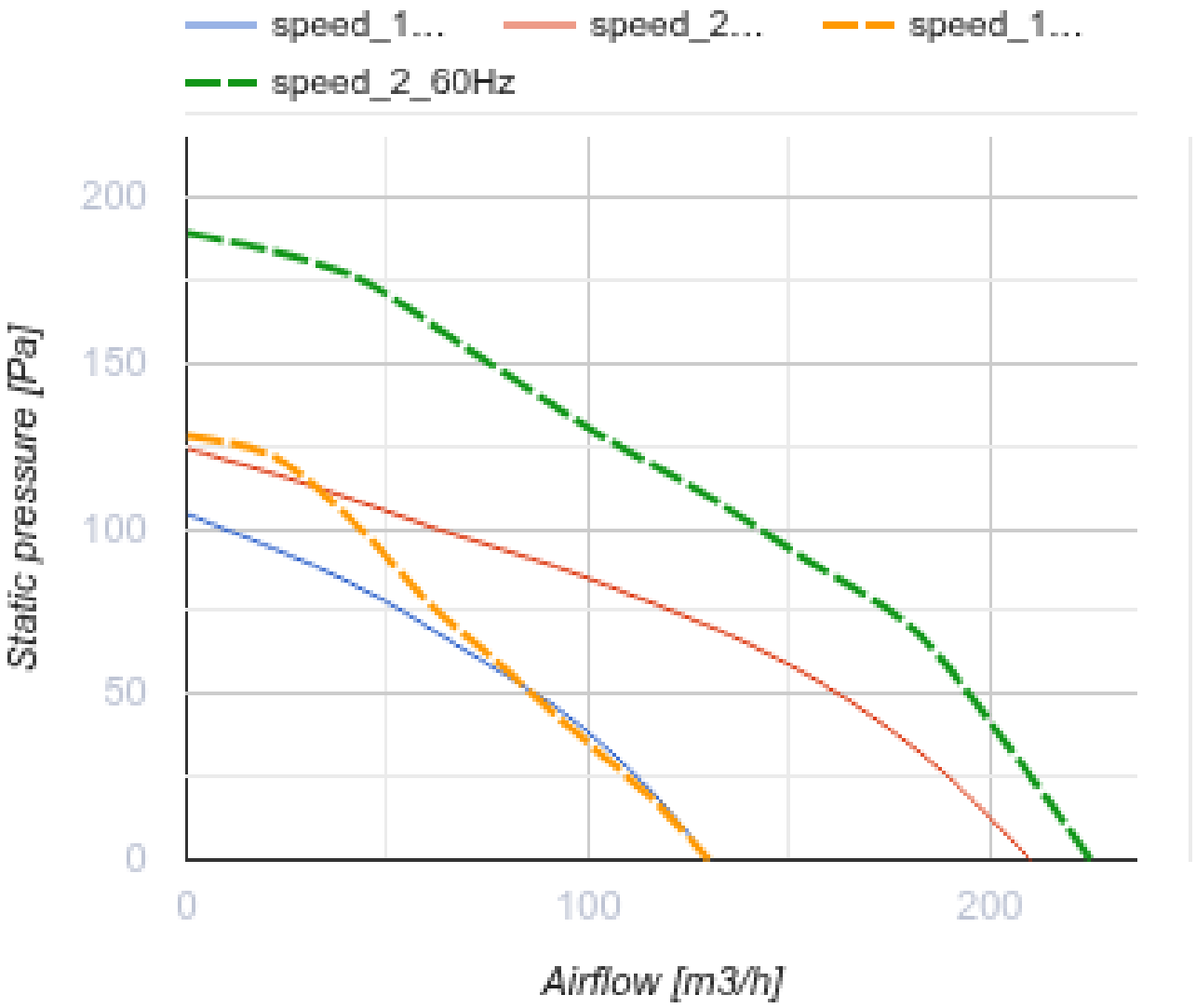

Dimensions

E	C	d	h	A	B	D	H	L1	L2
395	260	98	18	330	258	148	188	100	45

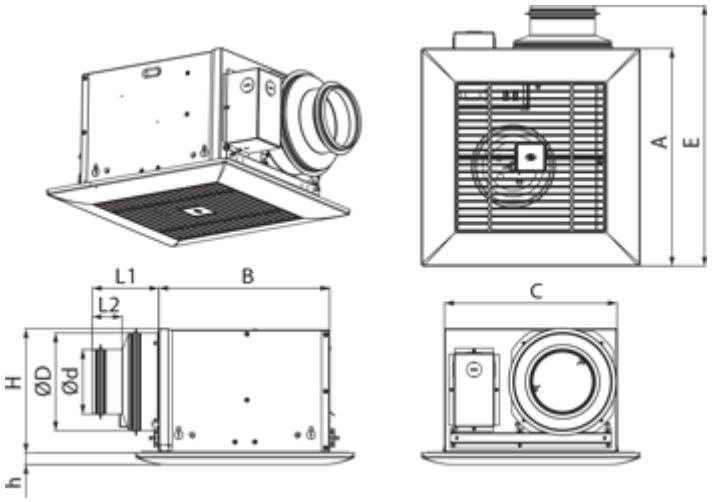

Accessories

Speed control switches

Name	Photo	Description
P2-10		Turning fan on/off and speed switching for multispeed fans

Metal

Name	Photo	Description
MVM 102 bVs N		Supply and exhaust metal hoods
MVM 152 bVs N		Supply and exhaust metal hoods

Flexible ducts

Name	Photo	Description
Polyvent 660		Flexible uninsulated air duct made of 65 micron PVC film

Other accessories

Name	Photo	Description
MV 102 V ASA		Supply and exhaust hoods

MV 152 V ASA		Supply and exhaust hoods

Fittings

Name	Photo	Description
CB 60-110		The clamps are designed for quick and reliable mounting and connection of various round ventilation system components. Clamps are the stainless steel quick-release clamps equipped with a stainless steel swing screw
CB 60-165		The clamps are designed for quick and reliable mounting and connection of various round ventilation system components. Clamps are the stainless steel quick-release clamps equipped with a stainless steel swing screw

Ecodesign

Trademark	Vents					
Model	CBF 200					
Specific energy consumption (SEC) (kWh/(m²/a))	Cold		Average		Warm	
	-26.9	B	-10.5	E	-1.1	F
Type of ventilation unit	Unidirectional					
Type of drive installed	2-speed					
Type of heat recovery system	None					
Maximum flow rate (m³/h)	64					
Electric power input (W)	25.5					
Reference flow rate (m³/s)	0.024					
Reference pressure difference (Pa)	50					
Specific power input (SPI) (W/(m³/h))	0.212					
Control typology	Manual control					
Maximum external leakage rates (%)	2.7					
Sound power level (dB(A))	45					
Declared typology	RVU UVU					
The annual electricity consumption (AEC) (kWh/a)	Cold		Average		Warm	
	265		265		265	
The annual heating saved (AHS) (kWh/a)	Cold		Average		Warm	
	3355		1715		776	