CBF LP 110 DC TH



Low-profile ceiling-mounted centrifugal fans for extract ventilation equipped with a DC motor

- Sound pressure level LpA at 3 m: 25
- Control: Built-in control panel
- Casing material: Galvanized steel
- Backdraft protection: Backdraft damper
- Humidity sensor
- Timer: Turn off timer, Turn on timer

	Unit of measurement	CBF LP 110 DC TH
Connected air duct size	mm	100
Phases	-	1
Maximum supply voltage	V	240
Minimum supply voltage	V	120
Power supply frequency	Hz	50/60
Rated power	W	19
Unit current	A	0.18 (0.3)
Maximum airflow	m^3/h	187
Sound pressure level LpA at 3 m	dB(A)	25
Weight	kg	6.4
Ambient air temperature min	°C	1
Ambient air temperature max	°C	40
Ingress protection rating	-	IPX4
Impeller material	-	Plastic

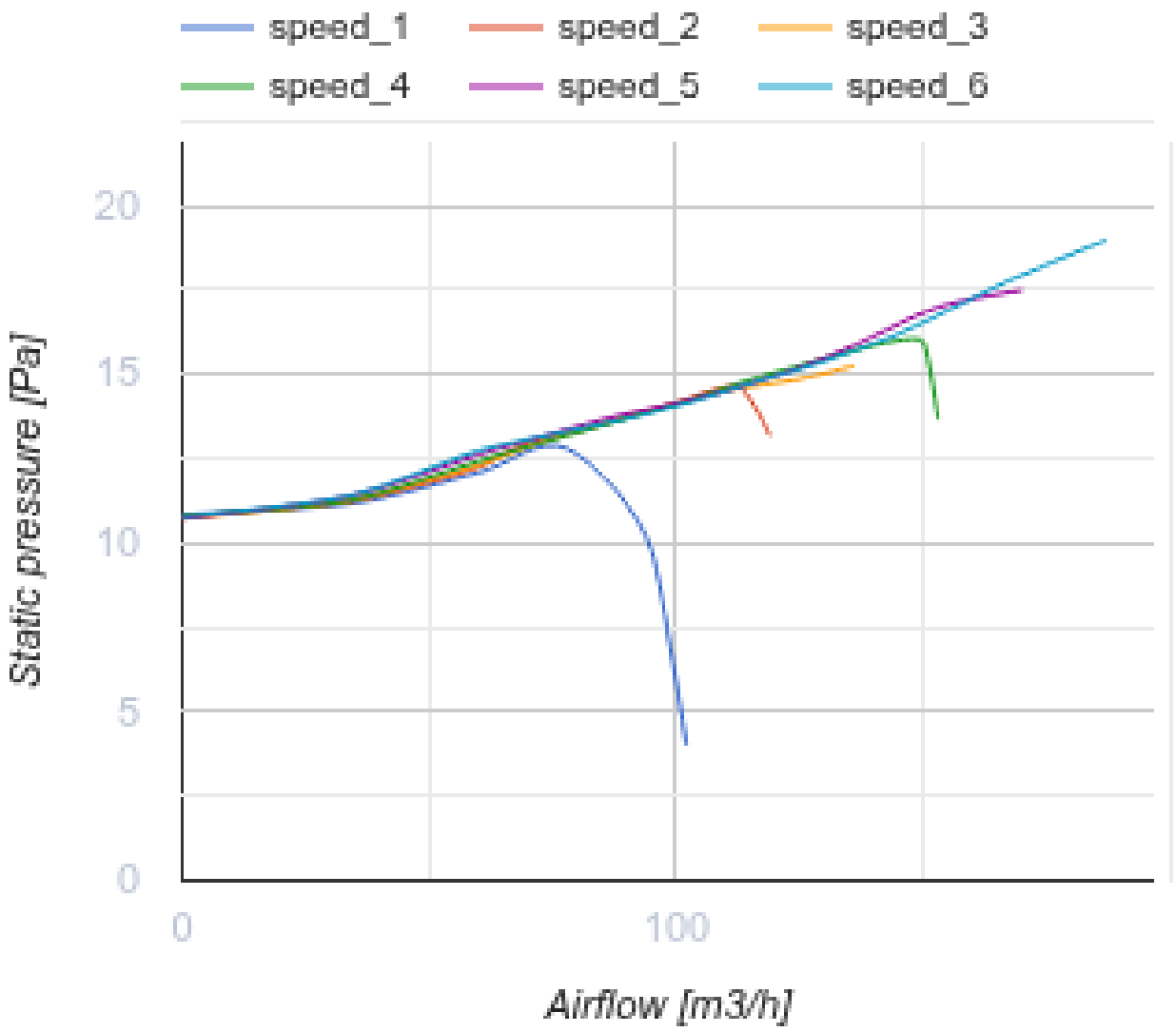

Dimensions

d	L1	L2	A	B	C	E	H	h	G
98	100	40.5	330	278	255	395	134	18	max 620

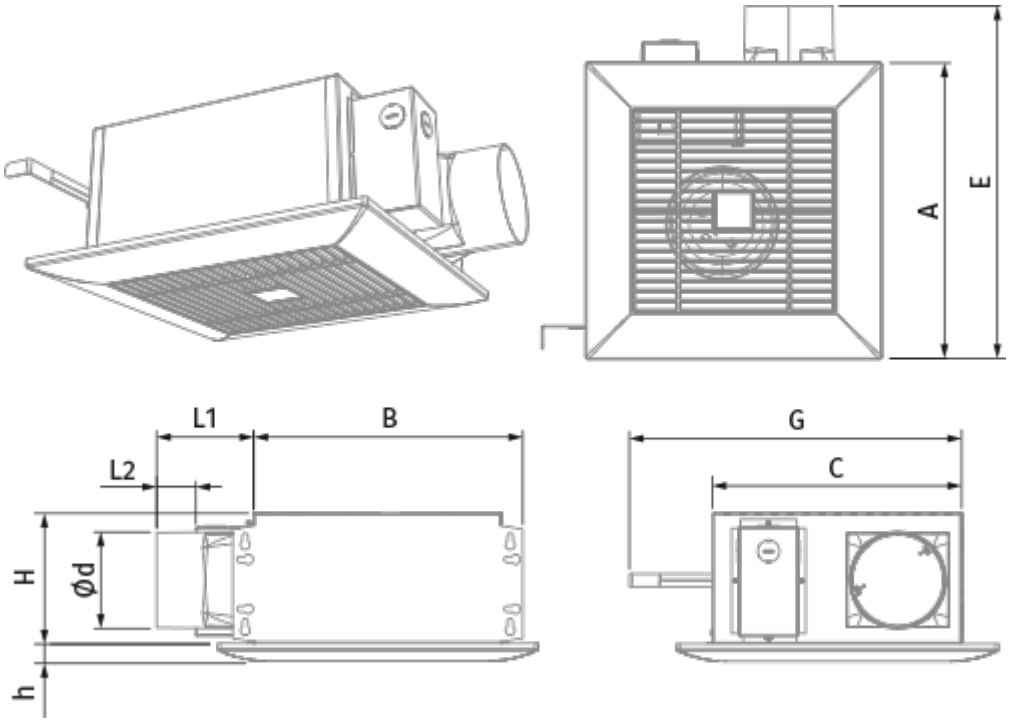

Accessories

Speed control switches

Name	Photo	Description
P2-10		Turning fan on/off and speed switching for multispeed fans

Metal

Name	Photo	Description
MVM 102 bVs N		Supply and exhaust metal hoods

Flexible ducts

Name	Photo	Description
Polyvent 660		Flexible uninsulated air duct made of 65 micron PVC film

Other accessories

Name	Photo	Description
TH CBF		Humidity sensor

Other accessories

Name	Photo	Description
MV 102 V ASA		Supply and exhaust hoods

Fittings

Name	Photo	Description
CB 60-110		The clamps are designed for quick and reliable mounting and connection of various round ventilation system components. Clamps are the stainless steel quick-release clamps equipped with a stainless steel swing screw

Ecodesign

Trademark	Vents					
Model	CBF LP 110 DC TH					
Specific energy consumption (SEC) (kWh/(m²/a))	Cold		Average		Warm	
	-53.9	A+	-26.9	B	-11.4	E
Type of ventilation unit	Unidirectional					
Type of drive installed	Variable speed					
Type of heat recovery system	None					
Maximum flow rate (m³/h)	90					
Electric power input (W)	14					
Reference flow rate (m³/s)	0.037					
Reference pressure difference (Pa)	50					
Specific power input (SPI) (W/(m³/h))	0.109					
Control typology	Local demand control					
Maximum external leakage rates (%)	2.7					
Declared typology	RVU UVU					
Sound power level (dB(A))	49					
The annual electricity consumption (AEC) (kWh/a)	Cold		Average		Warm	
	58		58		58	
The annual heating saved (AHS) (kWh/a)	Cold		Average		Warm	
	5536		2830		1280	