CBF LP 250

Low-profile ceiling-mounted centrifugal fans for extract ventilation

- Sound pressure level LpA at 3 m: 29
- Casing material: Galvanized steel
- Backdraft protection: Backdraft damper



	Unit of measurement	CBF LP 250	
Connected air duct size	mm	100	
Phases	-	1	
Maximum supply voltage	V	240	
Minimum supply voltage	V	220	
Power supply frequency	Hz	50/60	
Rated power	W	23	29
Unit current	A	0.12	0.18
Maximum airflow	m^3/h	170	260
Sound pressure level LpA at 3 m	dB(A)	25	29
Weight	kg	5.3	
Ambient air temperature max	°C	40	
Ambient air temperature min	°C	1	
Ingress protection rating	-	IPX4	
Impeller material	-	Plastic	

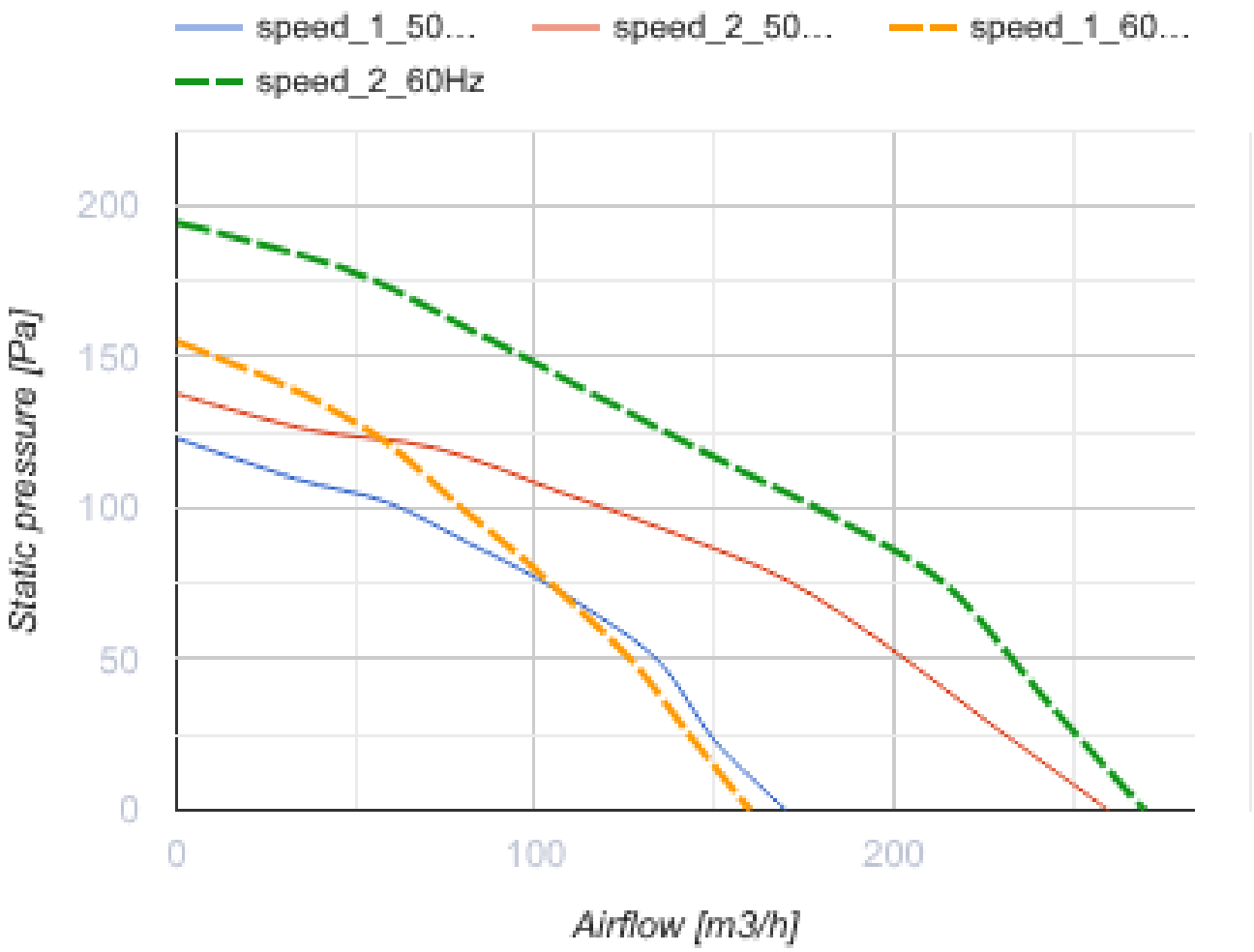

Dimensions

d	L1	L2	A	B	C	E	H	h	G
98	100	40.5	330	278	255	395	134	18	max 620

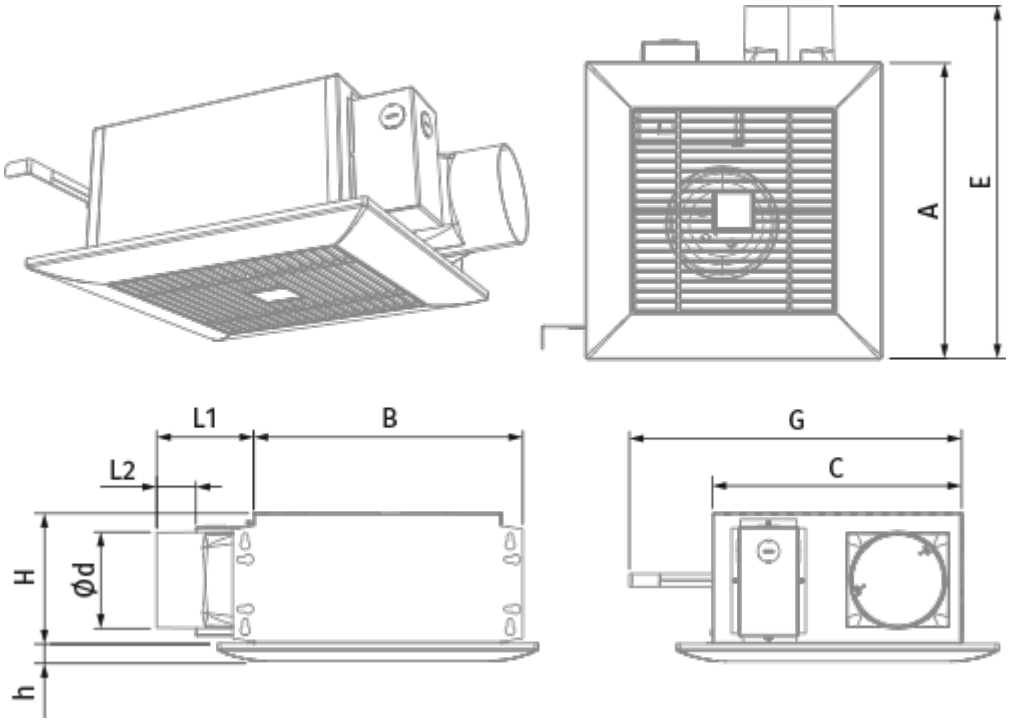

Accessories

Speed control switches

Name	Photo	Description
P2-10		Turning fan on/off and speed switching for multispeed fans

Metal

Name	Photo	Description
MVM 102 bVs N		Supply and exhaust metal hoods

Flexible ducts

Name	Photo	Description
Polyvent 660		Flexible uninsulated air duct made of 65 micron PVC film

Other accessories

Name	Photo	Description
MV 102 V ASA		Supply and exhaust hoods

Fittings

Name	Photo	Description
CB 60-110		The clamps are designed for quick and reliable mounting and connection of various round ventilation system components. Clamps are the stainless steel quick-release clamps equipped with a stainless steel swing screw

Ecodesign

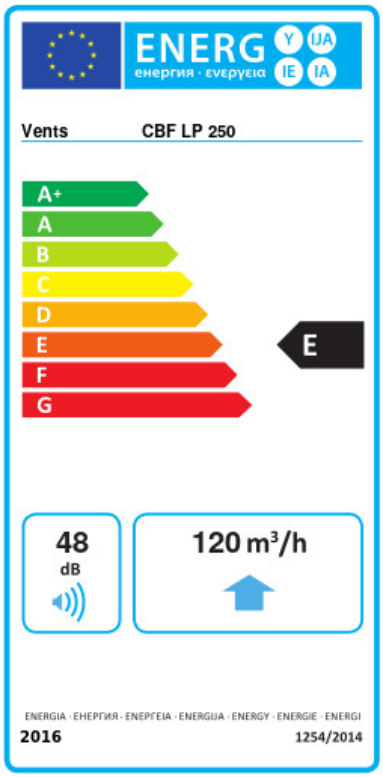

Trademark	Vents					
Model	CBF LP 250					
Specific energy consumption (SEC) (kWh/(m²/a))	Cold		Average		Warm	
	-28.6	B	-12.2	E	-2.8	F
Type of ventilation unit	Unidirectional					
Type of drive installed	2-speed					
Type of heat recovery system	None					
Maximum flow rate (m³/h)	120					
Electric power input (W)	36					
Reference flow rate (m³/s)	0.037					
Reference pressure difference (Pa)	50					
Specific power input (SPI) (W/(m³/h))	0.159					
Control typology	Manual control					
Maximum external leakage rates (%)	2.7					
Sound power level (dB(A))	48					
Declared typology	RVU UVU					
The annual electricity consumption (AEC) (kWh/a)	Cold		Average		Warm	
	199		199		199	
The annual heating saved (AHS) (kWh/a)	Cold		Average		Warm	
	3355		1715		776	