CF 100 turbo



Centrifugal extract fans

- Sound pressure level LpA at 3 m: 38
- Casing material: Plastic

	Unit of measurement	CF 100 turbo
Connected air duct size	mm	100
Phases	-	1
Minimum supply voltage	V	220
Maximum supply voltage	V	240
Power supply frequency	Hz	50
Rated power	W	29
Maximum airflow	m³/h	122
Rotation speed at 50hz	-	2500
Sound pressure level LpA at 3 m	dB(A)	38
Weight	kg	1.3
Ambient air temperature max	°C	45
Ingress protection rating	-	IP2X
Impeller material	-	Plastic

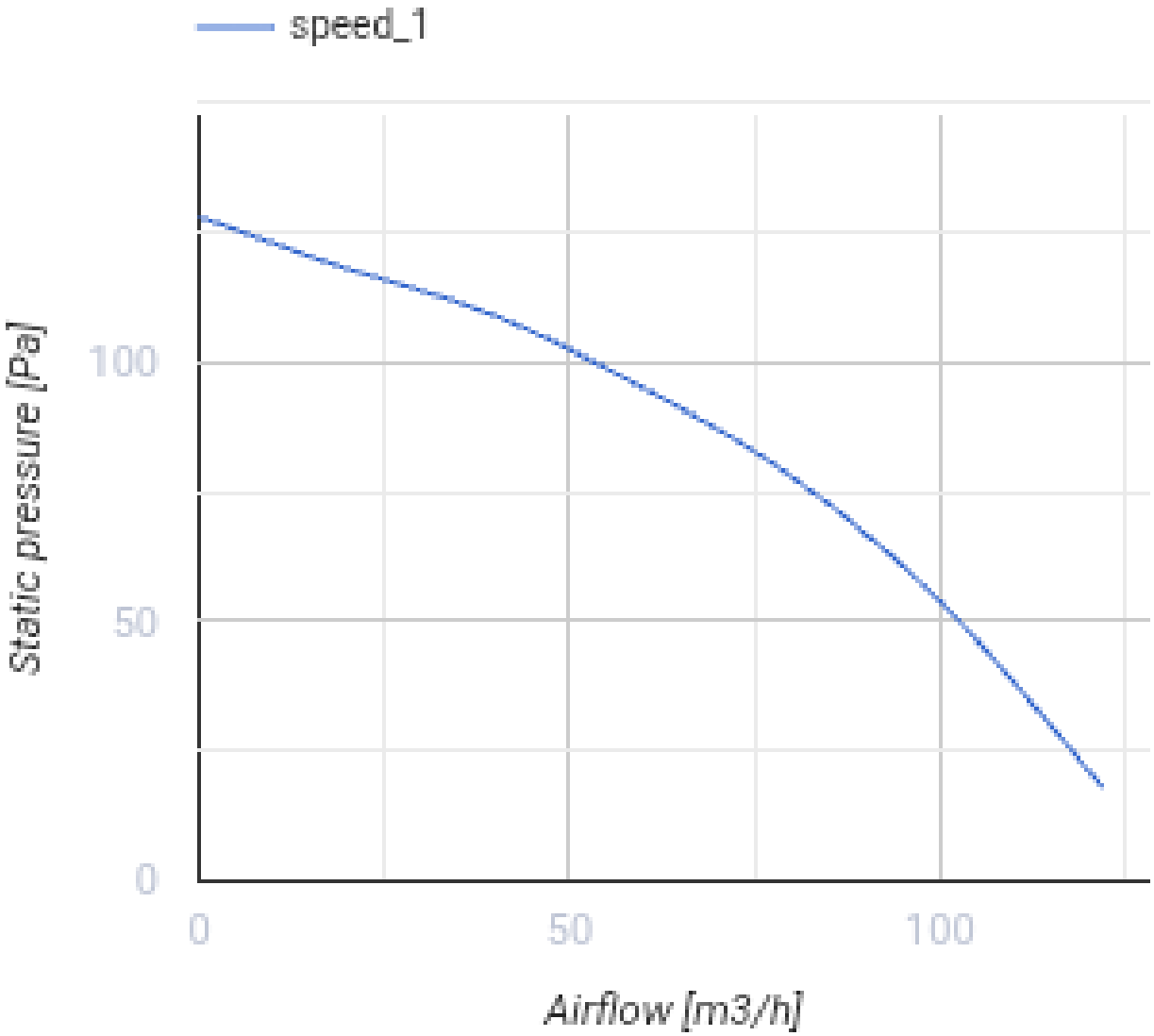

Dimensions

ØD	B	H	L	L1	L2	L3
100	180	195	132	59	73	26

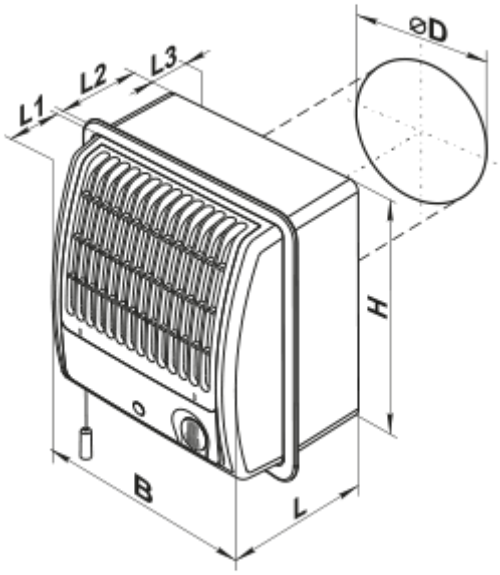
⌀D
L1
L2
L3
H
B
L