CZ 160



The quick-release clamp is designed for quick and reliable connection of spigots and round-section ventilation system elements

- Casing material: Galvanized steel

	Unit of measurement	CZ 160
Connected air duct size	mm	160
Weight	kg	0.358

Dimensions

ØD	H
160	232

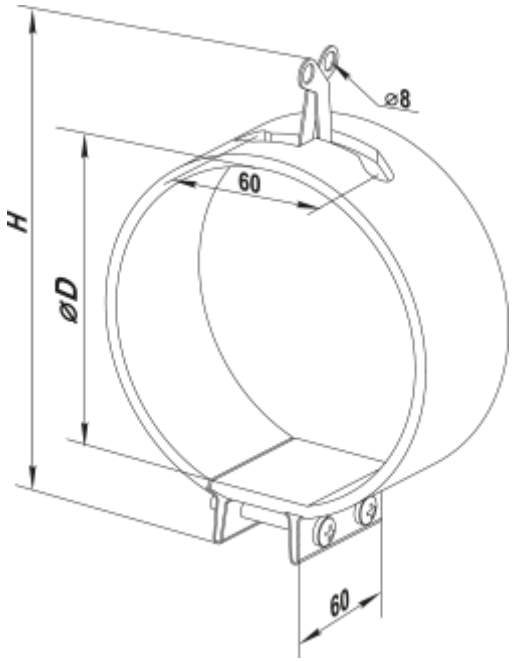
⌀8
60
H
⌀D
60