# CZ 250



The quick-release clamp is designed for quick and reliable connection of spigots and round-section ventilation system elements

- Casing material: Galvanized steel

| | Unit of measurement | CZ 250 |
|---|---|---|
| Connected air duct size | mm | 250 |
| Weight | kg | 0.55 |

## Dimensions

| ØD | H |
|---|---|
| 250 | 326 |

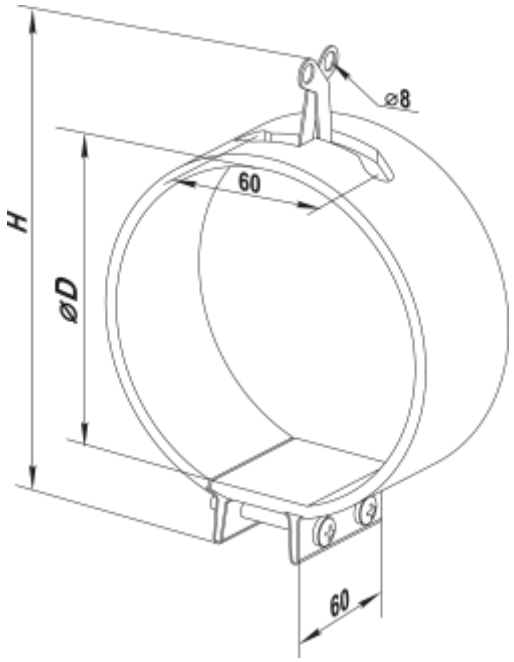
⌀8
60
H
⌀D
60