CZK 200

The quick-release clamps are designed for quick and reliable connection of various round ventilation system components

- Casing material: Galvanized steel



	Unit of measurement	CZK 200
Connected air duct size	mm	200
Weight	kg	0.31

Dimensions

ØD	L
200	304

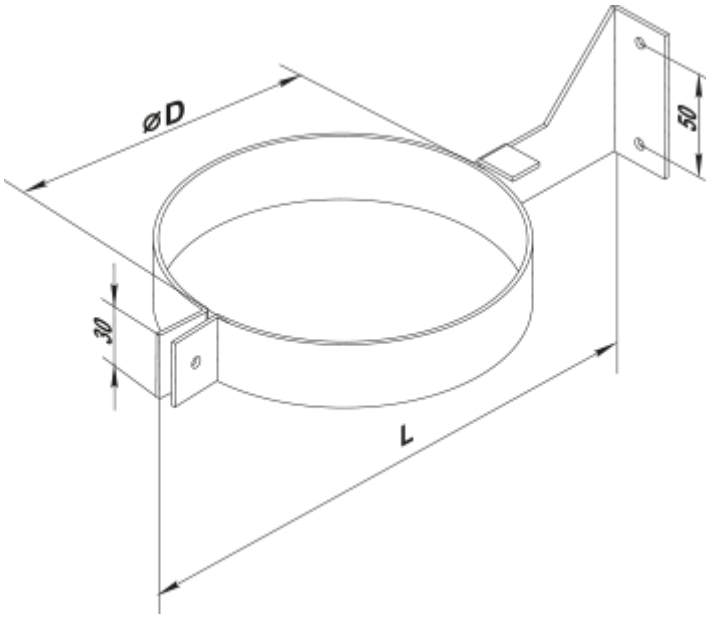
ØD
50
30
L