DG1 400x400

Metal access doors with a plasterboard plate for bathrooms



	Unit of measurement	DG1 400x400

Dimensions

L/H	L1/H1	B	B1
454	406	54	16

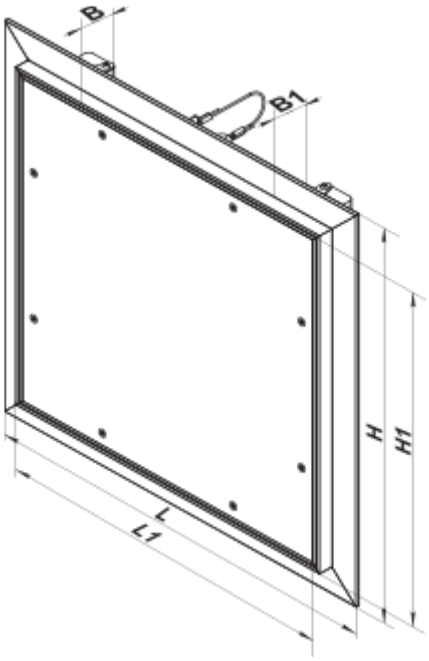
B
B1
H
H1
L
L1