DKM 150x200

Metal access doors for fixing ceramic tiles and with magnets for bathrooms



	Unit of measurement	DKM 150x200

Dimensions

B	H	B2	H2	L
163.6	213.6	150	200	26

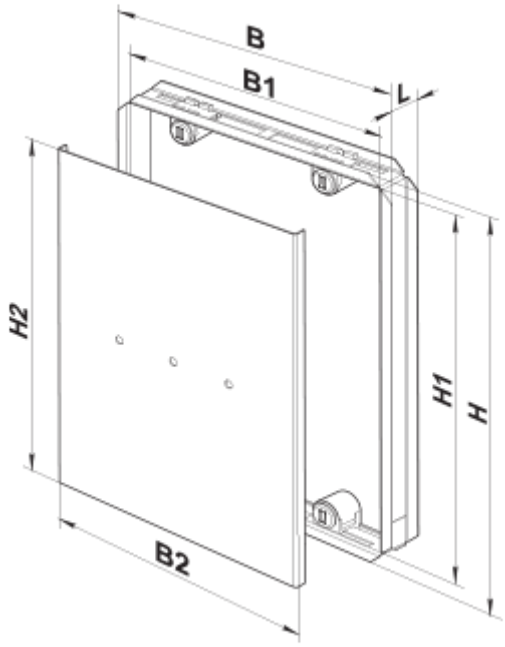
B
B1
L
H2
H1
H
B2