DKM 300x500

Metal access doors for fixing ceramic tiles and with magnets for bathrooms



	Unit of measurement	DKM 300x500

Dimensions

B	H	B2	H2	L
313.6	513.6	300	500	26

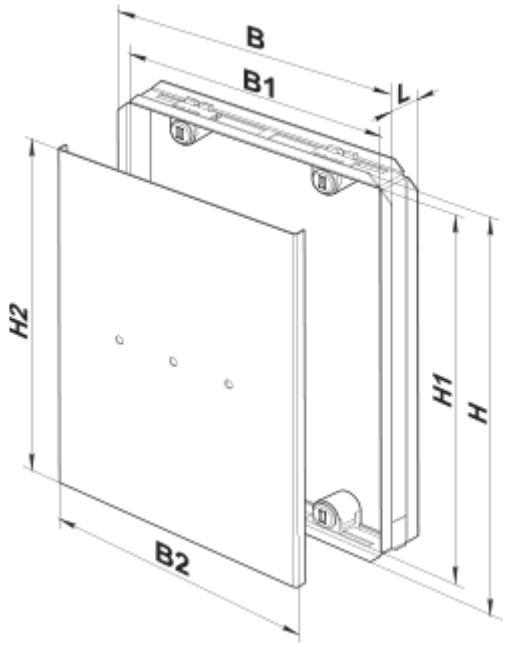
B
B1
L
H2
H1
H
B2