DKP 250x400

Metal access doors with PVC for fixing ceramic tiles and magnets for bathrooms



	Unit of measurement	DKP 250x400

Dimensions

B	H	B2	H2	B1	H1	L
256	406	245	395	253	403	30

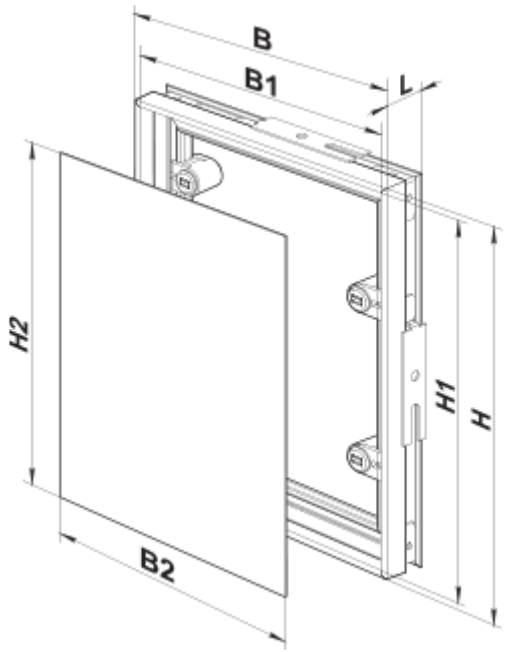
B
B1
L
H2
H1
H
B2