DMR 250x250

Metal moisture-resistant access doors with a plastic handle for bathrooms



	Unit of measurement	DMR 250x250

Dimensions

H	B	H1	B2	H2	B1	L
286.5	286.5	246.5	248.1	248.1	246.5	25

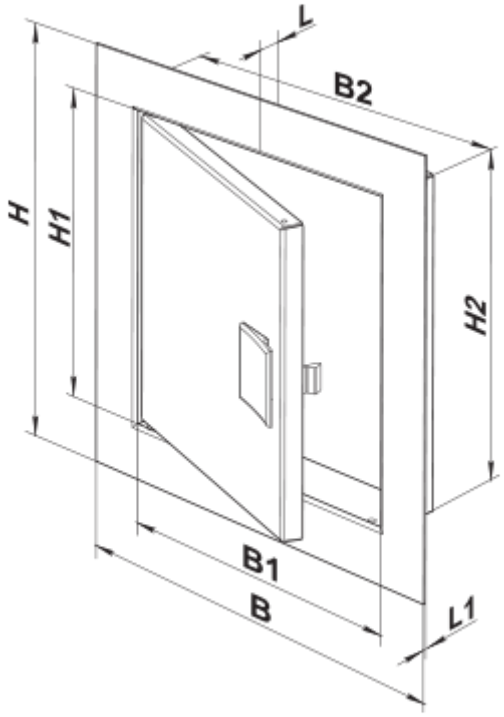
L
B2
H
H1
H2
B1
B
L1