DMV 150x200

Metal access doors with vents and magnets for bathrooms



	Unit of measurement	DMV 150x200

Dimensions

H	B	H1	B2	H2	B1	L
236.5	186.5	196.5	148.1	198.1	146.5	25

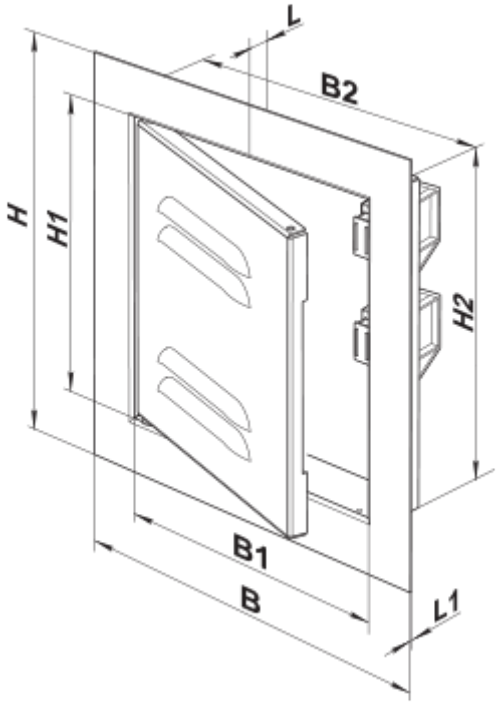
L
B2
H
H1
H2
B1
B
L1