# DMV 225x590

Metal access doors with vents and magnets for bathrooms



| | Unit of measurement | DMV 225x590 |
|---|---|---|

## Dimensions

| H | B | H1 | B2 | H2 | B1 | L |
|---|---|---|---|---|---|---|
| 626.5 | 261.5 | 586.5 | 223.1 | 588.1 | 221.5 | 25 |

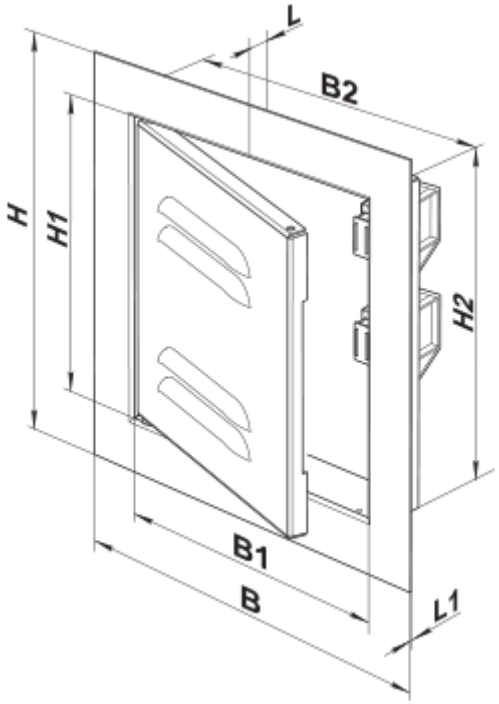
L
B2
H
H1
H2
B1
B
L1