DMV 300x600

Metal access doors with vents and magnets for bathrooms



	Unit of measurement	DMV 300x600

Dimensions

H	B	H1	B2	H2	B1	L
636.5	336.5	596.5	298.1	598.1	296.5	25

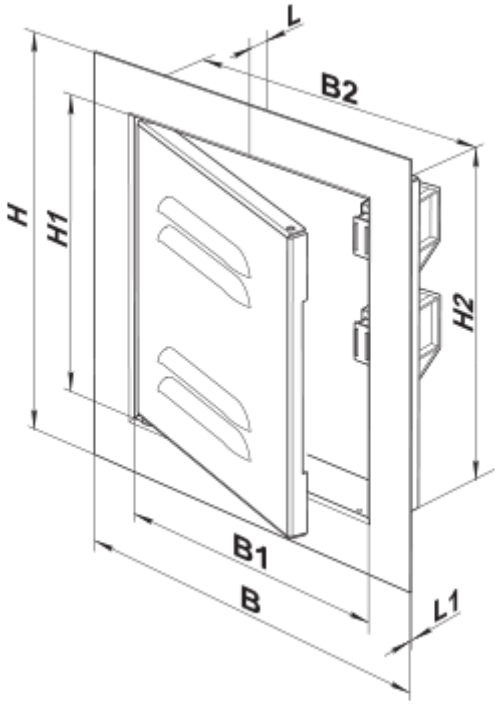
L
B2
H
H1
H2
B1
B
L1