# DMV 500x600

Metal access doors with vents and magnets for bathrooms



| | Unit of measurement | DMV 500x600 |
|---|---|---|

## Dimensions

| H | B | H1 | B2 | H2 | B1 | L |
|---|---|---|---|---|---|---|
| 636.5 | 536.5 | 596.5 | 498.1 | 598.1 | 496.5 | 25 |

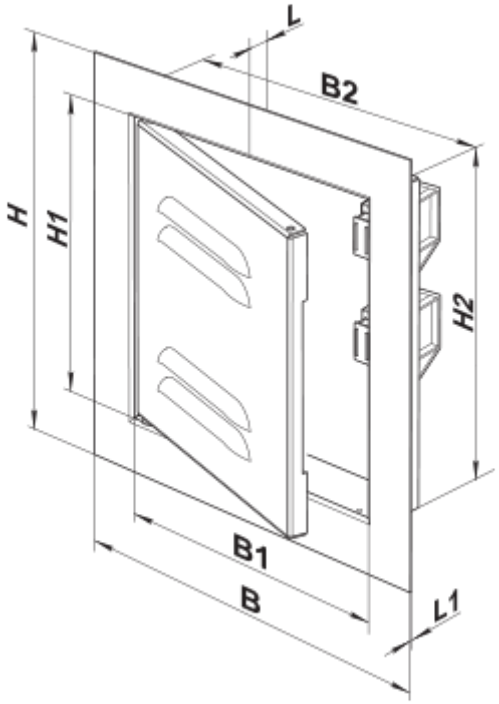
L
B2
H
H1
H2
B1
B
L1