DMV 600x800

Metal access doors with vents and magnets for bathrooms



	Unit of measurement	DMV 600x800

Dimensions

H	B	H1	B2	H2	B1	L
836.5	636.5	596.5	598.1	798.1	796.5	25

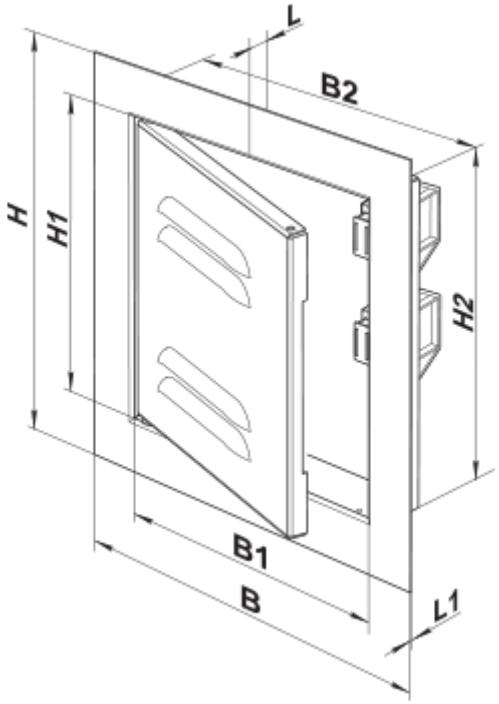
L
B2
H
H1
H2
B1
B
L1