DRF-OV 250



The destratificator is designed to prevent warm air from accumulating in the upper part of the building and direct it to the occupied area

- Sound pressure level LpA at 3 m: 53
- Casing material: Coated steel

	Unit of measurement	DRF-OV 250
Phases	-	1
Minimum supply voltage	V	230
Maximum supply voltage	V	230
Power supply frequency	Hz	50
Rated power	W	50
Maximum airflow	m³/h	800
Sound pressure level LpA at 3 m	dB(A)	53
Weight	kg	6

Dimensions

A	H	H1	ØD	ØD1	ØD2
390	524	386	341	260	9.1

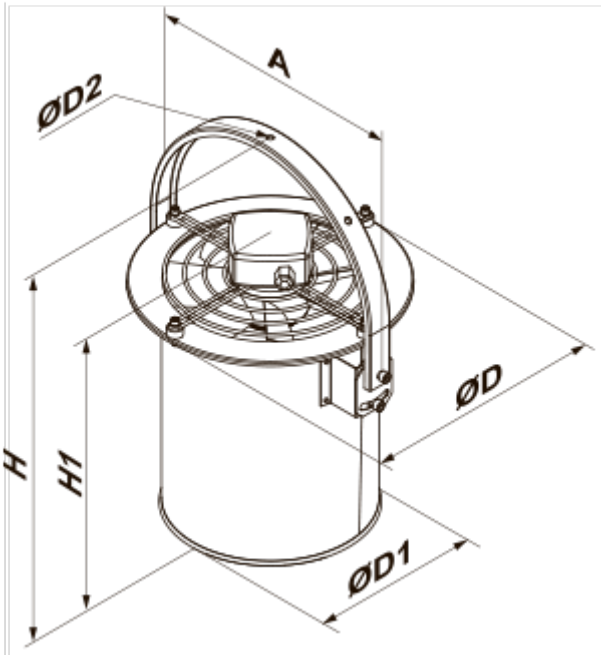
A
ØD2
ØD
H
H1
ØD1