DTV 500

Pressostat



	Unit of measurement	DTV 500
Phases	-	1
Maximum supply voltage	V	250
Minimum supply voltage	V	250
Power supply frequency	Hz	50
Weight	kg	0.1
Ambient air temperature max	°C	60
Ambient air temperature min	°C	-15
Ingress protection rating	-	IP54

Dimensions

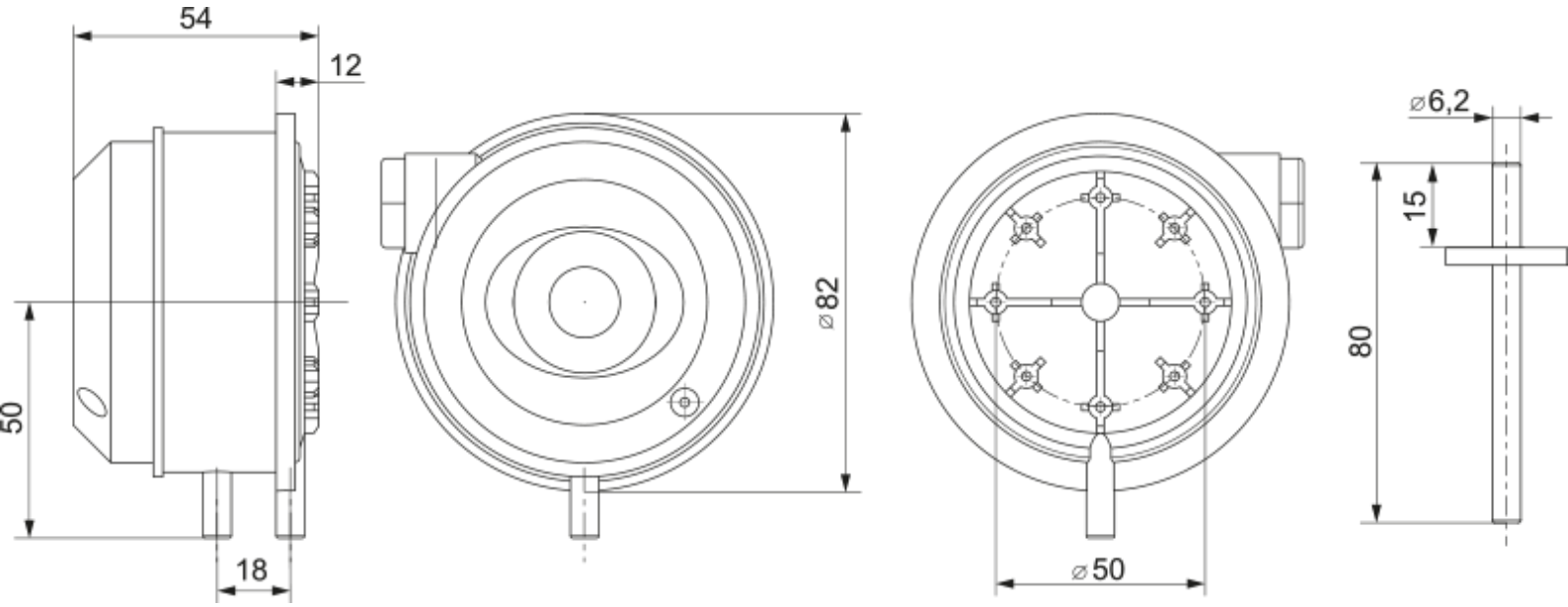
54
12
50
18
⌀82
⌀50
⌀6,2
15
80