EH-14 brown 100

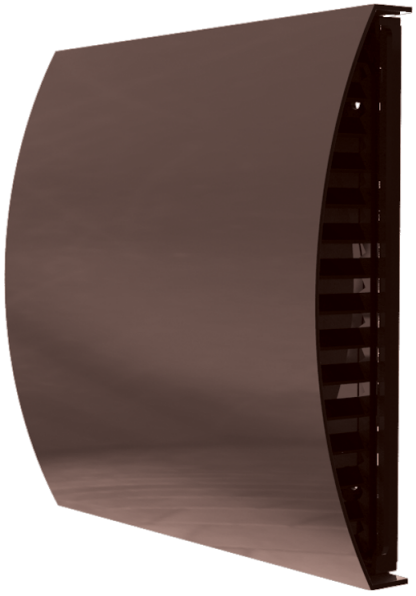

Plastic outer hood

• Casing material: PVC

	Unit of measurement	EH-14 brown 100
Connected air duct size	mm	100

Dimensions

B	H	L	ØD
220	230.5	54	100

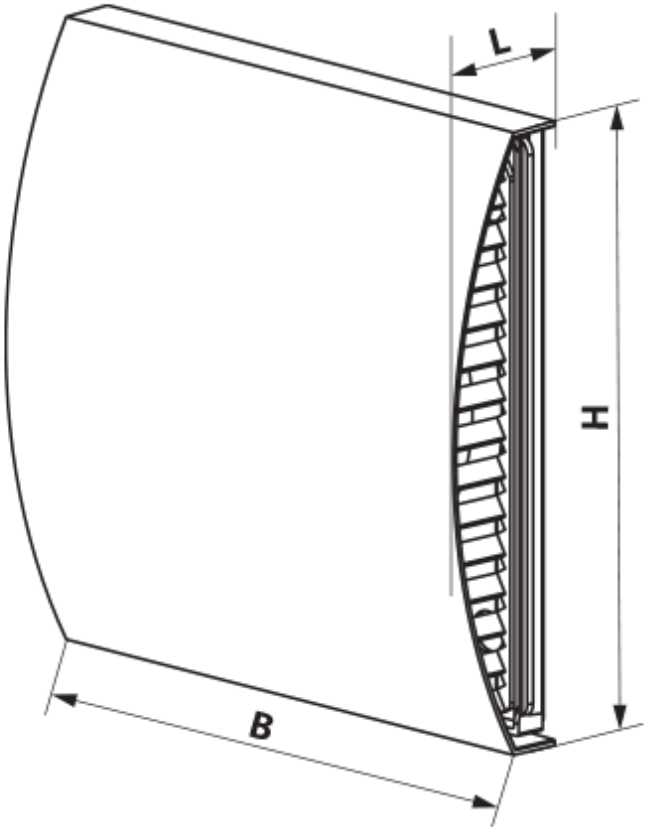
L
H
B

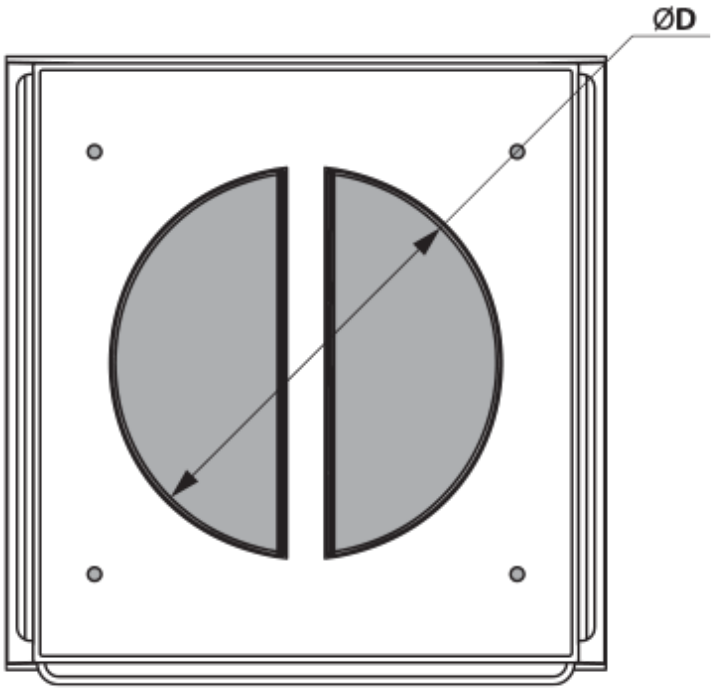
ØD