EH-14 terracotta 100

Plastic outer hood

- Casing material: PVC



	Unit of measurement	EH-14 terracotta 100
Connected air duct size	mm	100

Dimensions

B	H	L	ØD
220	230.5	54	100

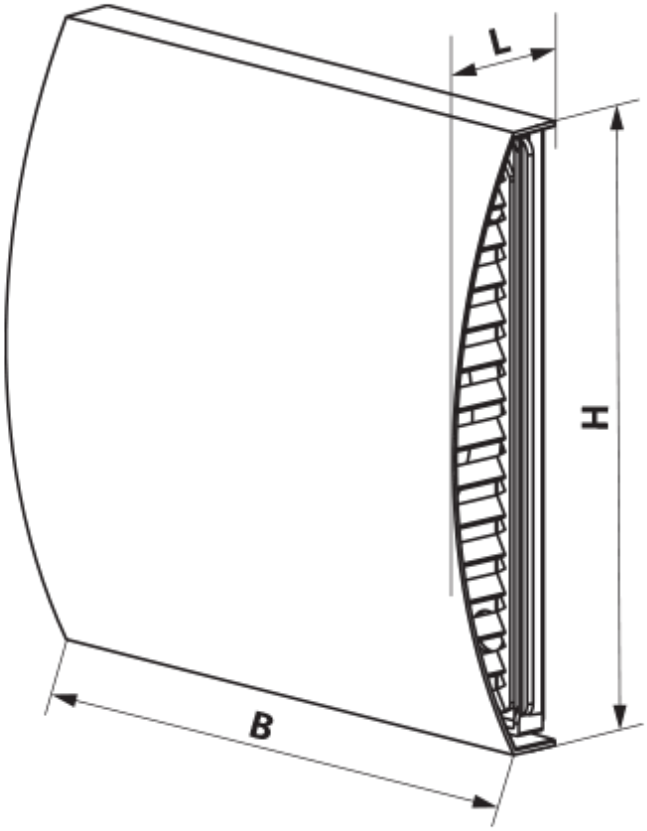
L
H
B

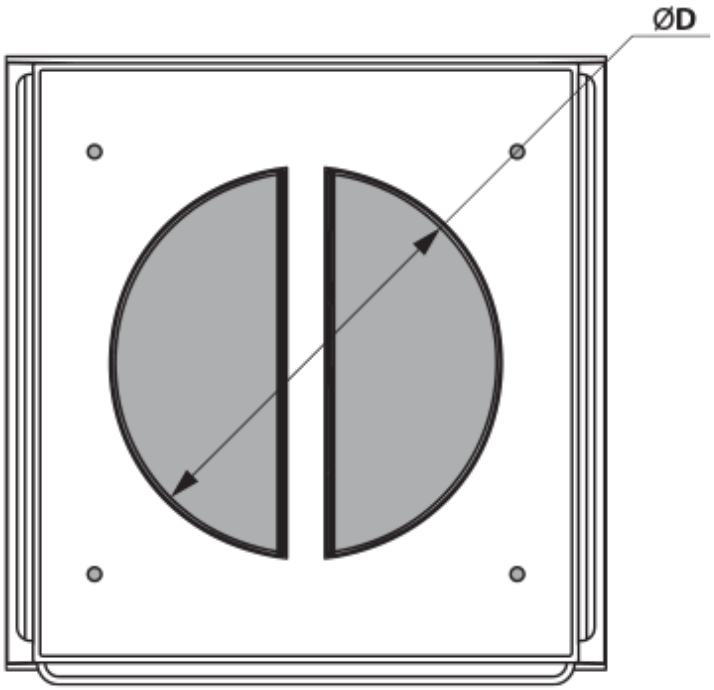
ØD