# EH-17 grey 100

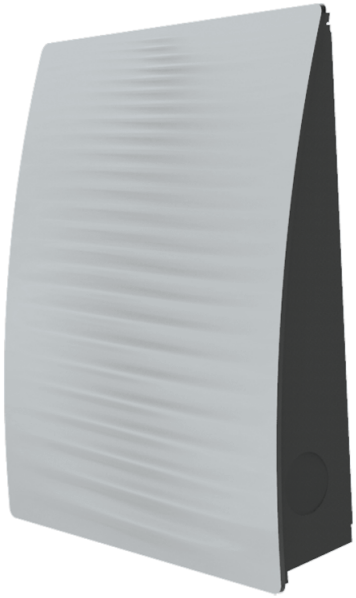

Plastic outer hood

• Casing material: PVC

| | Unit of measurement | EH-17 grey 100 |
|---|---|---|
| Connected air duct size | mm | 100 |

## Dimensions

| B | H | L | ØD |
|---|---|---|---|
| 212 | 250 | 55.5 | 100 |

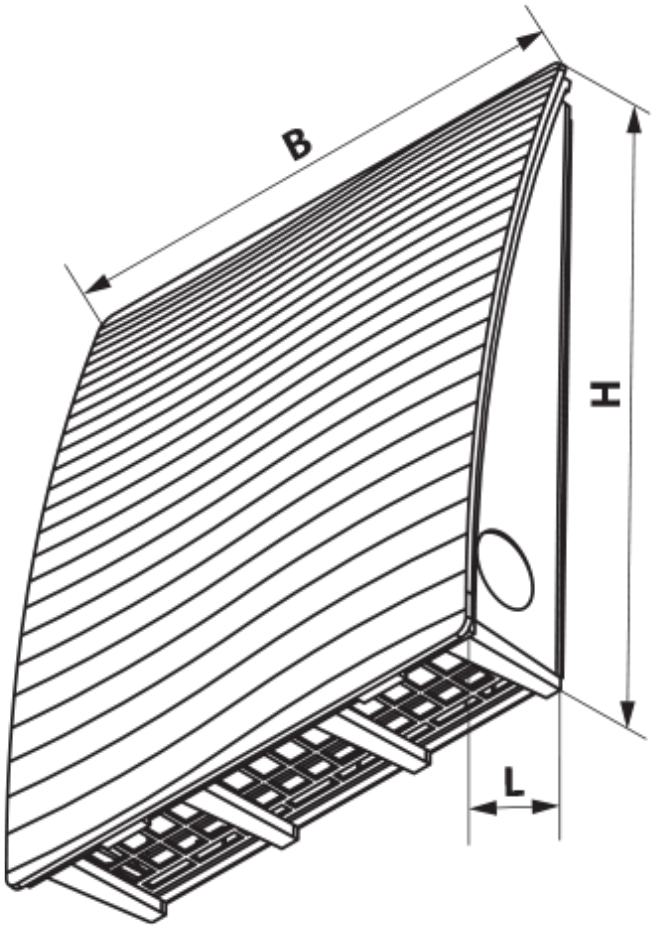
B
H
L

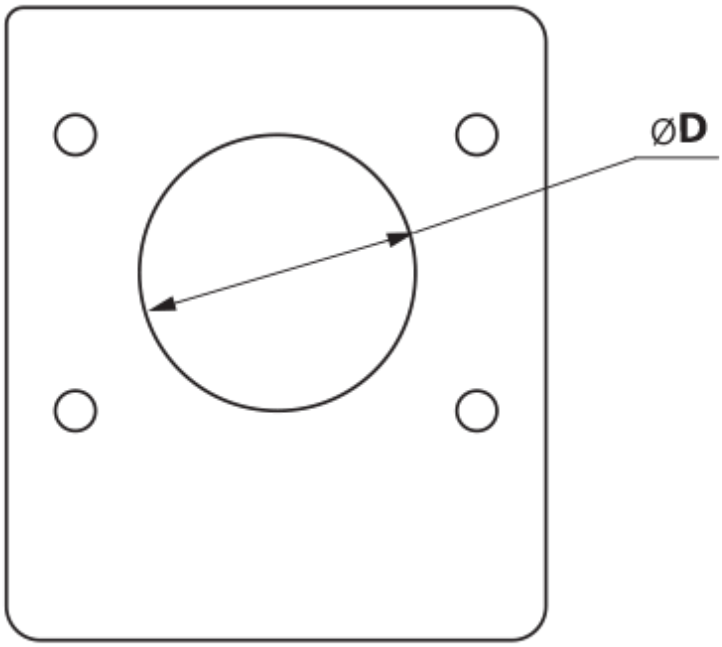
ØD