Enave-CT 120 P A71 L



Suspended air handling units with a counterflow polystyrene or enthalpy heat exchanger

- Sound pressure level LpA at 3 m: 27
- Heat exchanger type: Counter flow
- Heat exchanger material: Enthalpy
- Supply filter: G4 / Coarse > 60% (option F7 / ePM1 60%)
- Extract filter: G4 / Coarse > 60%
- Sound-insulated casing
- Enthalpy heat exchanger
- Bypass: Auto
- BMS protocol: ModBus
- Control: Smartphone
- Casing material: EPP
- Humidity sensor: Optional
- CO2 sensor: Optional

	Unit of measurement	Enave-CT 120 P A71 L
Connected air duct size	mm	125/100
Phases	-	1
Maximum supply voltage	V	230
Minimum supply voltage	V	230
Power supply frequency	Hz	50/60
Rated power	W	59
Unit current	A	0.5
Maximum airflow	m³/h	156
Sound pressure level LpA at 3 m	dB(A)	27
Heat recovery efficiency, max	%	81
Heat exchanger type	-	Counter flow
Heat exchanger material	-	Enthalpy
Weight	kg	8
Supply filter	-	G4 / Coarse > 60% (option F7 / ePM1 60%)
Extract filter	-	G4 / Coarse > 60%
Transported air temperature (max)	°C	40
Transported air temperature (min)	°C	-25
Ambient air temperature min	°C	1
Ambient air temperature max	°C	40

Ingress protection rating	-	IP22
Ambient air humidity max	%	60
Ingress protection rating of the drive	-	IP44

Dimensions

ØD	Ød	H	W	L	W1
125	104	247	522	530	600

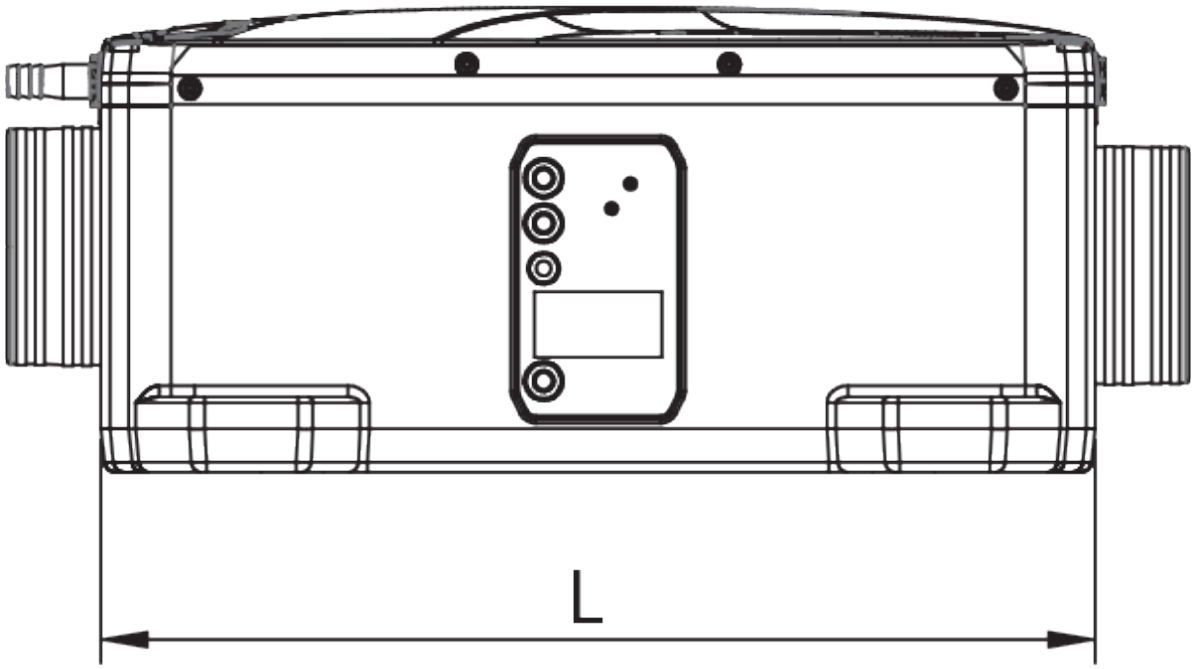
L

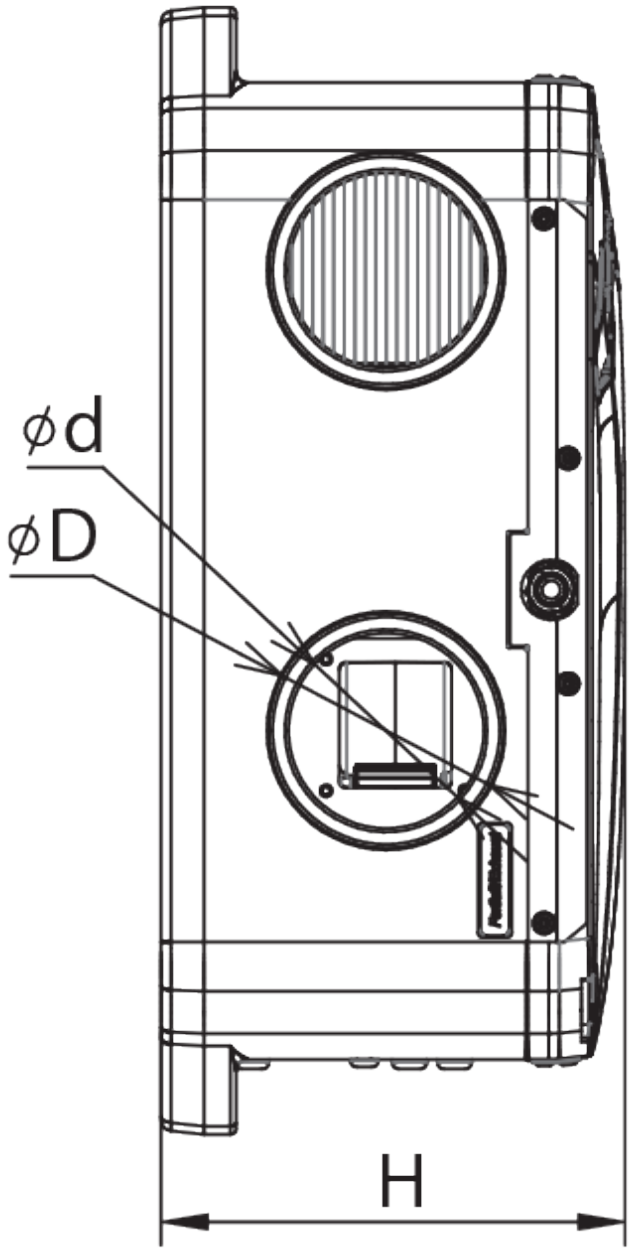
ød
øD
H

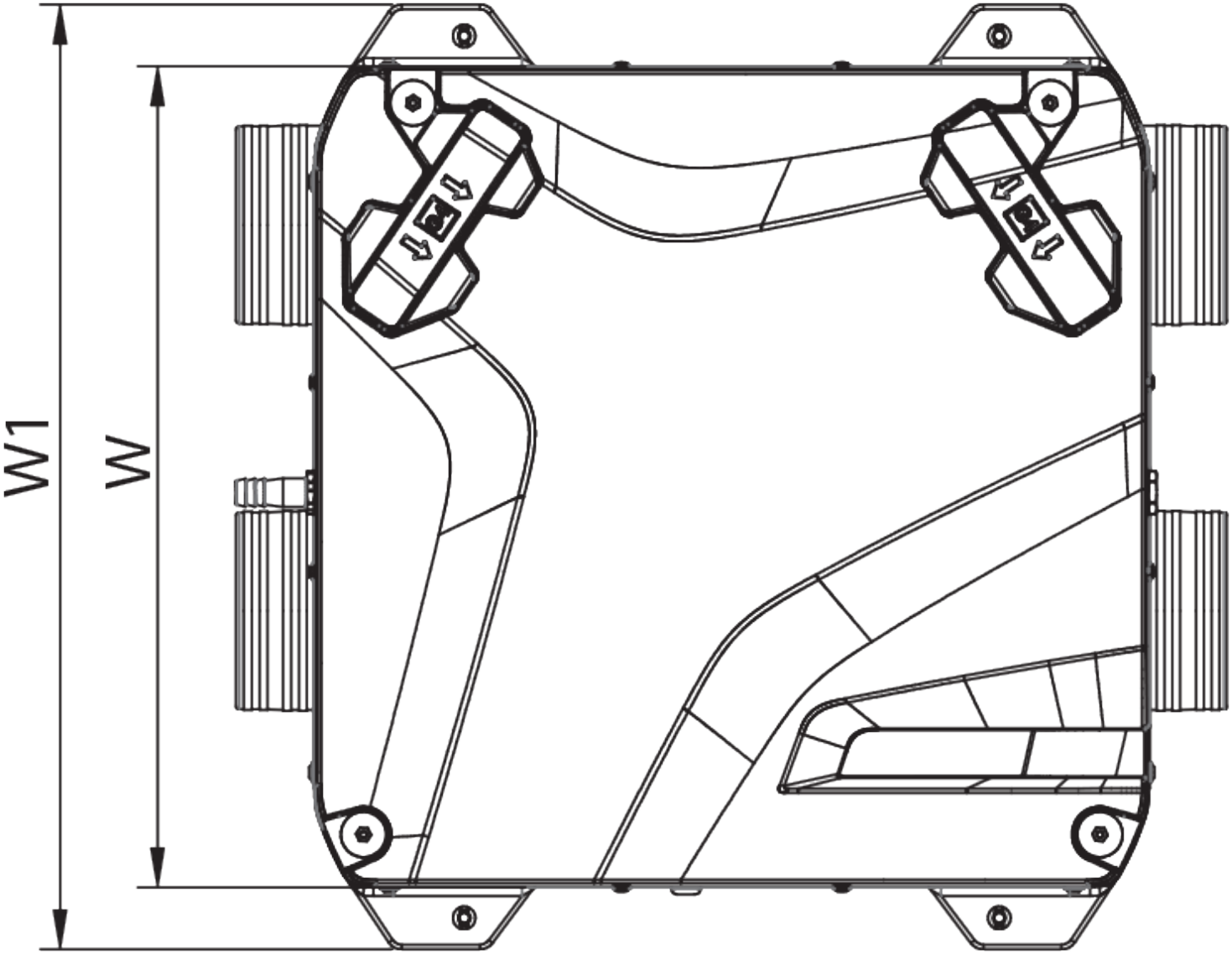

Accessories

Control Panels for AHU

Name	Photo	Description

A25		Touch screen control panel for controlling industrial and residential air handling units
A22		Control panels for controlling industrial and residential air handling units
A22 WiFi		Control panels for controlling industrial and residential air handling units

Sensors

Name	Photo	Description
HV2		Humidity sensor
CO2-1		CO2 sensors
CO2-2		CO2 sensors
HR-S		Electro-mechanical humidistat
CO2-3		CO2 sensor

For round ducts

Name	Photo	Description
SR 125/600		Silencers made of galvanized steel filled with non-combustible sound-absorbing material
SR 125/900		Silencers made of galvanized steel filled with non-combustible sound-absorbing material
SR 125/1200		Silencers made of galvanized steel filled with non-combustible sound-absorbing material

For round ducts

Name	Photo	Description

KRV 125		Air dampers for automatic air flow control in round ducts

Electric actuators

Name	Photo	Description
Belimo TF230		The actuators are designed for controlling air dampers with cross section up to 0.4 m² performing protection functions

Other accessories

Name	Photo	Description
SF 176x150x22 G4		Panel filter G4
SF 176x150x22 F7		F7 panel filter

Ecodesign

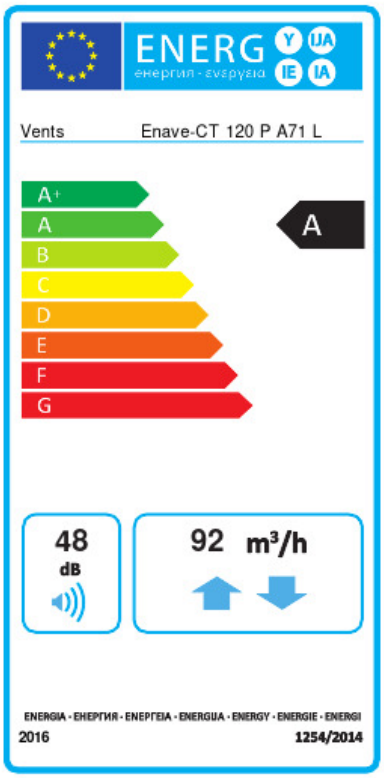

Trademark	Vents					
Model	Enave-CT 120 P A71 L					
Specific energy consumption (SEC) (kWh/(m²/a))	Cold		Average		Warm	
	-76.5	A+	-40.1	A	-16.7	E
Type of ventilation unit	Bidirectional					
Type of drive installed	Variable speed					
Type of heat recovery system	Recuperative					
Thermal efficiency of heat recovery (%)	74					
Maximum flow rate (m³/h)	92					
Electric power input (W)	21					
Reference flow rate (m³/s)	0.026					
Reference pressure difference (Pa)	50					
Specific power input (SPI) (W/(m³/h))	0.229					
Control typology	Local demand control					
Maximum internal leakage rates (%)	2.1					
Maximum external leakage rates (%)	2.6					
Sound power level (dB(A))	48					
Declared typology	RVU BVU					
The annual electricity consumption (AEC) (kWh/a)	Cold		Average		Warm	
	703.4		166.4		121.4	
The annual heating saved (AHS) (kWh/a)	Cold		Average		Warm	
	8533		4362		1972	