# Enave-CT 150 P A21 L



Suspended air handling units with a counterflow polystyrene or enthalpy heat exchanger

- Sound pressure level LpA at 3 m: 27
- Heat exchanger type: Counter flow
- Heat exchanger material: Enthalpy
- Supply filter: G4 / Coarse > 60% (option F7 / ePM1 60%)
- Extract filter: G4 / Coarse > 60%
- Sound-insulated casing
- Enthalpy heat exchanger
- Bypass: Auto
- Reheater: Optional
- Preheater: Optional
- BMS protocol: ModBus
- Control: Smartphone
- Casing material: EPP
- Humidity sensor: Optional
- CO2 sensor: Optional
- PM2.5 sensor: Optional

| | Unit of measurement | Enave-CT 150 P A21 L |
|---|---|---|
| Connected air duct size | mm | 160/125 |
| Phases | - | 1 |
| Maximum supply voltage | V | 230 |
| Minimum supply voltage | V | 230 |
| Power supply frequency | Hz | 50/60 |
| Rated power | W | 72 |
| Unit current | A | 0.63 |
| Maximum airflow | m³/h | 229 |
| Sound pressure level LpA at 3 m | dB(A) | 27 |
| Heat recovery efficiency, max | % | 85 |
| Heat exchanger type | - | Counter flow |
| Heat exchanger material | - | Enthalpy |
| Weight | kg | 19.5 |
| Supply filter | - | G4 / Coarse > 60% (option F7 / ePM1 60%) |
| Extract filter | - | G4 / Coarse > 60% |
| Transported air temperature (max) | °C | 40 |
| Transported air temperature (min) | °C | -25 |
| Ambient air temperature max | °C | 40 |
| Ambient air temperature min | °C | 1 |

| | | |
|---|---|---|
| Ingress protection rating | - | IP22 |
| Ambient air humidity max | % | 60 |
| Ingress protection rating of the drive | - | IP44 |

## Dimensions

| Ø D | Ø D1 | H | L | L1 | W | W1 | W2 | W3 |
|---|---|---|---|---|---|---|---|---|
| 160 | 125 | 242 | 1160 | 685 | 683 | 642 | 610 | 521 |

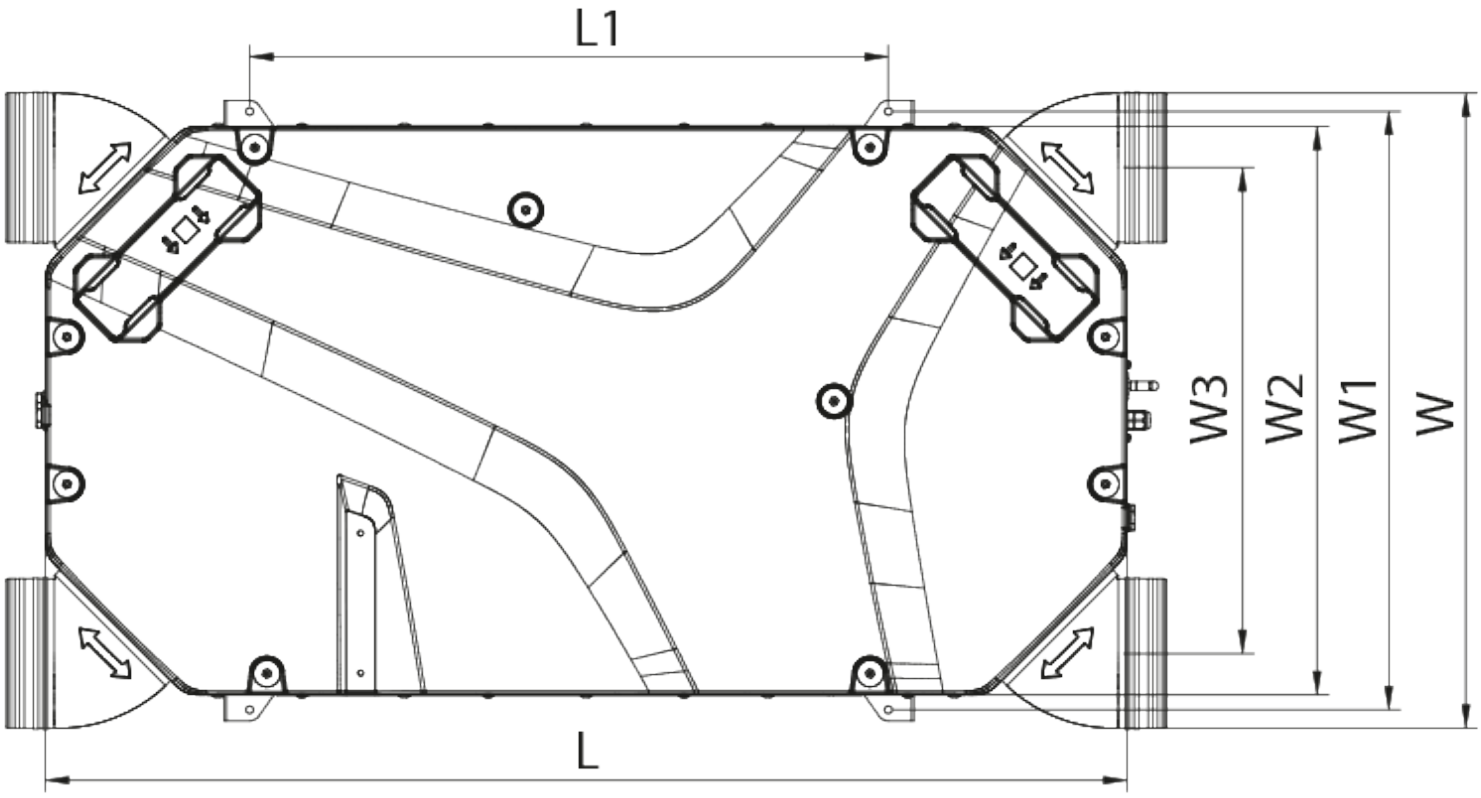
L1
W3
W2
W1
W
L

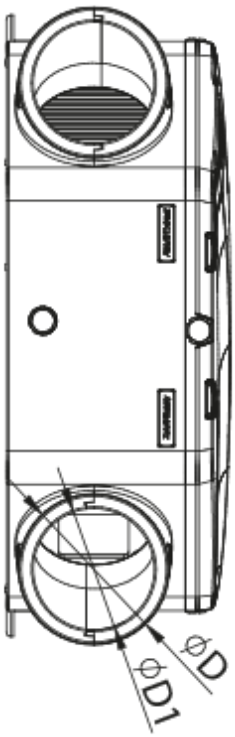
ØD
ØD1

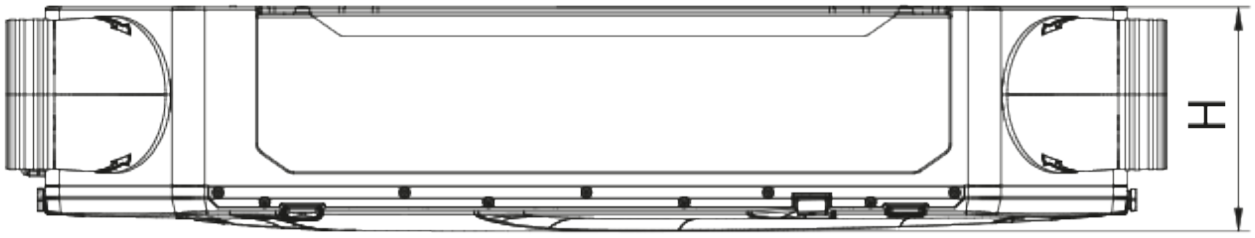


## Accessories

### Control Panels for AHU

| Name | Photo | Description |
|---|---|---|

| | | |
|---|---|---|
| A25 |  | Touch screen control panel for controlling industrial and residential air handling units |
| A22 |  | Control panels for controlling industrial and residential air handling units |
| A22 WiFi |  | Control panels for controlling industrial and residential air handling units |

### Sensors

| Name | Photo | Description |
|---|---|---|
| HV2 |  | Humidity sensor |
| CO2-1 |  | CO2 sensors |
| CO2-2 |  | CO2 sensors |
| HR-S |  | Electro-mechanical humidistat |
| CO2-3 |  | CO2 sensor |

### Electrical heaters

| Name | Photo | Description |
|---|---|---|
| NKP 160-0,8-1 A21 V.2 |  | Inline heaters for heat exchanger frost protection |
| NKP 160-1,2-1 A21 V.2 |  | Inline heaters for heat exchanger frost protection |
| NKP 160-1,7-1 A21 V.2 |  | Inline heaters for heat exchanger frost protection |
| NKP 160-2,0-1 A21 V.2 |  | Inline heaters for heat exchanger frost protection |

### For round ducts

| Name | Photo | Description |
|---|---|---|

| | | |
|---|---|---|
| SR 160/600 |  | Silencers made of galvanized steel filled with non-combustible sound-absorbing material |
| SR 160/900 |  | Silencers made of galvanized steel filled with non-combustible sound-absorbing material |
| SR 160/1200 |  | Silencers made of galvanized steel filled with non-combustible sound-absorbing material |

### For round ducts

| Name | Photo | Description |
|---|---|---|
| KRV 160 |  | Air dampers for automatic air flow control in round ducts |

### Electrical heaters

| Name | Photo | Description |
|---|---|---|
| NKD 160-0,8-1 A21 V.2 |  | Inline supply air reheaters with external control |
| NKD 160-1,2-1 A21 V.2 |  | Inline supply air reheaters with external control |
| NKD 160-1,7-1 A21 V.2 |  | Inline supply air reheaters with external control |
| NKD 160-2,0-1 A21 V.2 |  | Inline supply air reheaters with external control |

### Electric actuators

| Name | Photo | Description |
|---|---|---|
| Belimo TF230 |  | The actuators are designed for controlling air dampers with cross section up to 0.4 m² performing protection functions |

### Other accessories

| Name | Photo | Description |
|---|---|---|
| SF 200x165x48 Coarse 60% G4 |  | Panel filter G4 |

| | | |
|---|---|---|
| SF 200x165x48 ePM1 65% F7 |  | F7 panel filter |

## Ecodesign

| Trademark | Vents | | | | | |
|---|---|---|---|---|---|---|
| Model | Enave-CT 150 P A21 L | | | | | |
| Specific energy consumption (SEC) (kWh/(m²/a)) | Cold | | Average | | Warm | |
| | -78.8 | A+ | -41.6 | A | -17.7 | E |
| Type of ventilation unit | Bidirectional | | | | | |
| Type of drive installed | Variable speed | | | | | |
| Type of heat recovery system | Recuperative | | | | | |
| Thermal efficiency of heat recovery (%) | 78 | | | | | |
| Maximum flow rate (m³/h) | 168 | | | | | |
| Electric power input (W) | 64 | | | | | |
| Reference flow rate (m³/s) | 0.033 | | | | | |
| Reference pressure difference (Pa) | 50 | | | | | |
| Specific power input (SPI) (W/(m³/h)) | 0.18 | | | | | |
| Control typology | Local demand control | | | | | |
| Maximum internal leakage rates (%) | 2.7 | | | | | |
| Maximum external leakage rates (%) | 2.7 | | | | | |
| Sound power level (dB(A)) | 48 | | | | | |
| The annual electricity consumption (AEC) (kWh/a) | Cold | | Average | | Warm | |
| | 677 | | 140 | | 95 | |
| The annual heating saved (AHS) (kWh/a) | Cold | | Average | | Warm | |
| | 8695 | | 4445 | | 2010 | |