Enave-CT 200 P A21 L



Suspended air handling units with a counterflow polystyrene or enthalpy heat exchanger

- Sound pressure level LpA at 3 m: 33
- Heat exchanger type: Counter flow
- Heat exchanger material: Enthalpy
- Supply filter: G4 / Coarse > 60% (option F7 / ePM1 60%)
- Extract filter: G4 / Coarse > 60%
- Sound-insulated casing
- Enthalpy heat exchanger
- Bypass: Auto
- Reheater: Optional
- Preheater: Optional
- BMS protocol: ModBus
- Control: Smartphone
- Casing material: EPP
- Humidity sensor: Optional
- CO2 sensor: Optional
- PM2.5 sensor: Optional

	Unit of measurement	Enave-CT 200 P A21 L
Connected air duct size	mm	160/125
Phases	-	1
Maximum supply voltage	V	230
Minimum supply voltage	V	230
Power supply frequency	Hz	50/60
Rated power	W	111
Unit current	A	0.9
Maximum airflow	m³/h	279
Sound pressure level LpA at 3 m	dB(A)	33
Heat recovery efficiency, max	%	85
Heat exchanger type	-	Counter flow
Heat exchanger material	-	Enthalpy
Weight	kg	19.5
Supply filter	-	G4 / Coarse > 60% (option F7 / ePM1 60%)
Extract filter	-	G4 / Coarse > 60%
Transported air temperature (max)	°C	40
Transported air temperature (min)	°C	-25
Ambient air temperature max	°C	40
Ambient air temperature min	°C	1

Ingress protection rating	-	IP22
Ambient air humidity max	%	60
Ingress protection rating of the drive	-	IP44

Dimensions

Ø D	Ø D1	H	L	L1	W	W1	W2	W3
160	125	242	1160	685	683	642	610	521

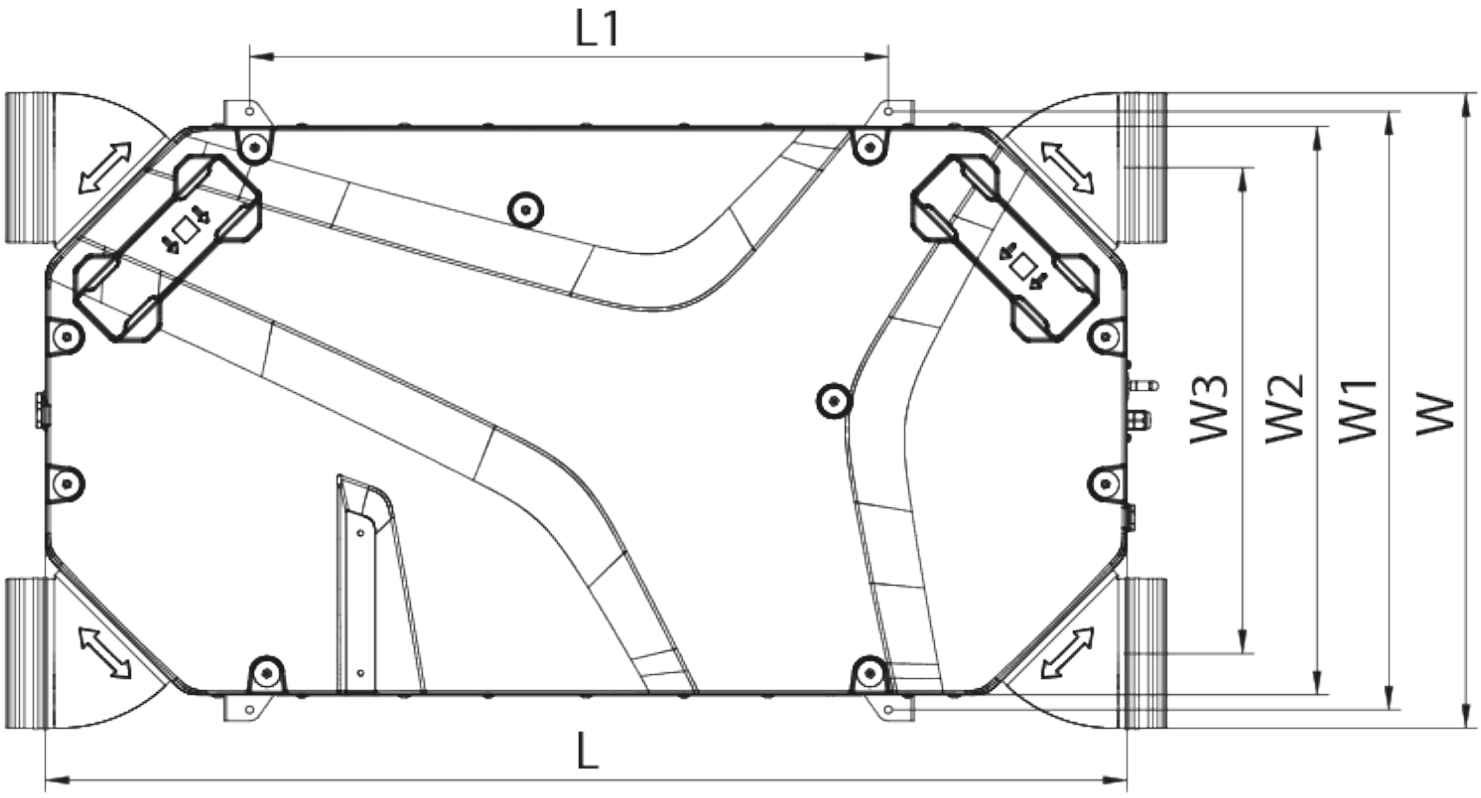
L1
W3
W2
W1
W
L

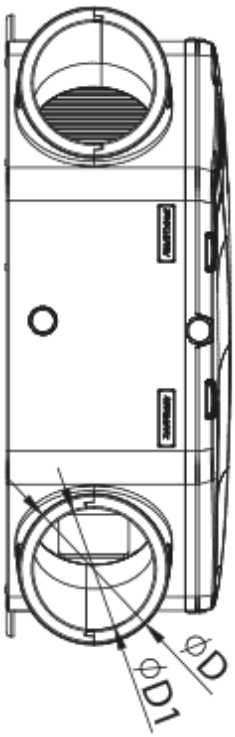
ØD
ØD1

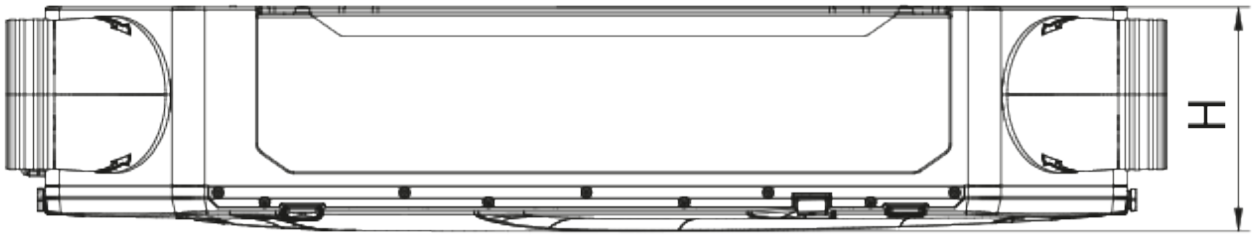

Accessories

Control Panels for AHU

Name	Photo	Description

A25		Touch screen control panel for controlling industrial and residential air handling units
A22		Control panels for controlling industrial and residential air handling units
A22 WiFi		Control panels for controlling industrial and residential air handling units

Sensors

Name	Photo	Description
HV2		Humidity sensor
CO2-1		CO2 sensors
CO2-2		CO2 sensors
HR-S		Electro-mechanical humidistat
CO2-3		CO2 sensor

Electrical heaters

Name	Photo	Description
NKP 160-0,8-1 A21 V.2		Inline heaters for heat exchanger frost protection
NKP 160-1,2-1 A21 V.2		Inline heaters for heat exchanger frost protection
NKP 160-1,7-1 A21 V.2		Inline heaters for heat exchanger frost protection
NKP 160-2,0-1 A21 V.2		Inline heaters for heat exchanger frost protection

For round ducts

Name	Photo	Description

SR 160/600		Silencers made of galvanized steel filled with non-combustible sound-absorbing material
SR 160/900		Silencers made of galvanized steel filled with non-combustible sound-absorbing material
SR 160/1200		Silencers made of galvanized steel filled with non-combustible sound-absorbing material

For round ducts

Name	Photo	Description
KRV 160		Air dampers for automatic air flow control in round ducts

Electrical heaters

Name	Photo	Description
NKD 160-0,8-1 A21 V.2		Inline supply air reheaters with external control
NKD 160-1,2-1 A21 V.2		Inline supply air reheaters with external control
NKD 160-1,7-1 A21 V.2		Inline supply air reheaters with external control
NKD 160-2,0-1 A21 V.2		Inline supply air reheaters with external control

Electric actuators

Name	Photo	Description
Belimo TF230		The actuators are designed for controlling air dampers with cross section up to 0.4 m² performing protection functions

Other accessories

Name	Photo	Description
SF 200x165x48 Coarse 60% G4		Panel filter G4

SF 200x165x48 ePM1 65% F7		F7 panel filter

Ecodesign

Trademark	Vents					
Model	Enave-CT 200 P A21 L					
Specific energy consumption (SEC) (kWh/(m²/a))	Cold		Average		Warm	
	-78	A+	-41	A	-17.2	E
Type of ventilation unit	Bidirectional					
Type of drive installed	Variable speed					
Type of heat recovery system	Recuperative					
Thermal efficiency of heat recovery (%)	77					
Maximum flow rate (m³/h)	235					
Electric power input (W)	103					
Reference flow rate (m³/s)	0.046					
Reference pressure difference (Pa)	50					
Specific power input (SPI) (W/(m³/h))	0.21					
Control typology	Local demand control					
Maximum internal leakage rates (%)	2.7					
Maximum external leakage rates (%)	2.7					
Sound power level (dB(A))	54					
The annual electricity consumption (AEC) (kWh/a)	Cold		Average		Warm	
	693		156		111	
The annual heating saved (AHS) (kWh/a)	Cold		Average		Warm	
	8655		4424		2001	