Enave-CT 200 PE A21 R

Suspended air handling units with a counterflow polystyrene or enthalpy heat exchanger



- Power of electrical preheater: 800
- Sound pressure level LpA at 3 m: 33
- Heat exchanger type: Counter flow
- Heat exchanger material: Enthalpy
- Supply filter: G4 / Coarse > 60% (option F7 / ePM1 60%)
- Extract filter: G4 / Coarse > 60%
- Sound-insulated casing
- Enthalpy heat exchanger
- Bypass: Auto
- Reheater: Optional
- Preheater: Built-in
- BMS protocol: ModBus
- Control: Smartphone
- Casing material: EPP
- Humidity sensor: Optional
- CO2 sensor: Optional
- PM2.5 sensor: Optional

	Unit of measurement	Enave-CT 200 PE A21 R
Connected air duct size	mm	125/160
Phases	-	1
Minimum supply voltage	V	230
Maximum supply voltage	V	230
Power supply frequency	Hz	50/60
Rated power	W	111
Power of electrical preheater	W	800
Unit current	A	4.45
Maximum airflow	m³/h	279
Sound pressure level LpA at 3 m	dB(A)	33
Heat recovery efficiency, max	%	85
Heat exchanger type	-	Counter flow
Heat exchanger material	-	Enthalpy
Weight	kg	19.5
Supply filter	-	G4 / Coarse > 60% (option F7 / ePM1 60%)
Extract filter	-	G4 / Coarse > 60%
Transported air temperature (max)	°C	40
Transported air temperature (min)	°C	-25
Ambient air temperature min	°C	1

Ambient air temperature max	°C	40
Ingress protection rating	-	IP22
Ambient air humidity max	%	60
Ingress protection rating of the drive	-	IP44

Dimensions

Ø D	Ø D1	H	L	L1	W	W1	W2	W3
160	125	242	1160	685	683	642	610	521

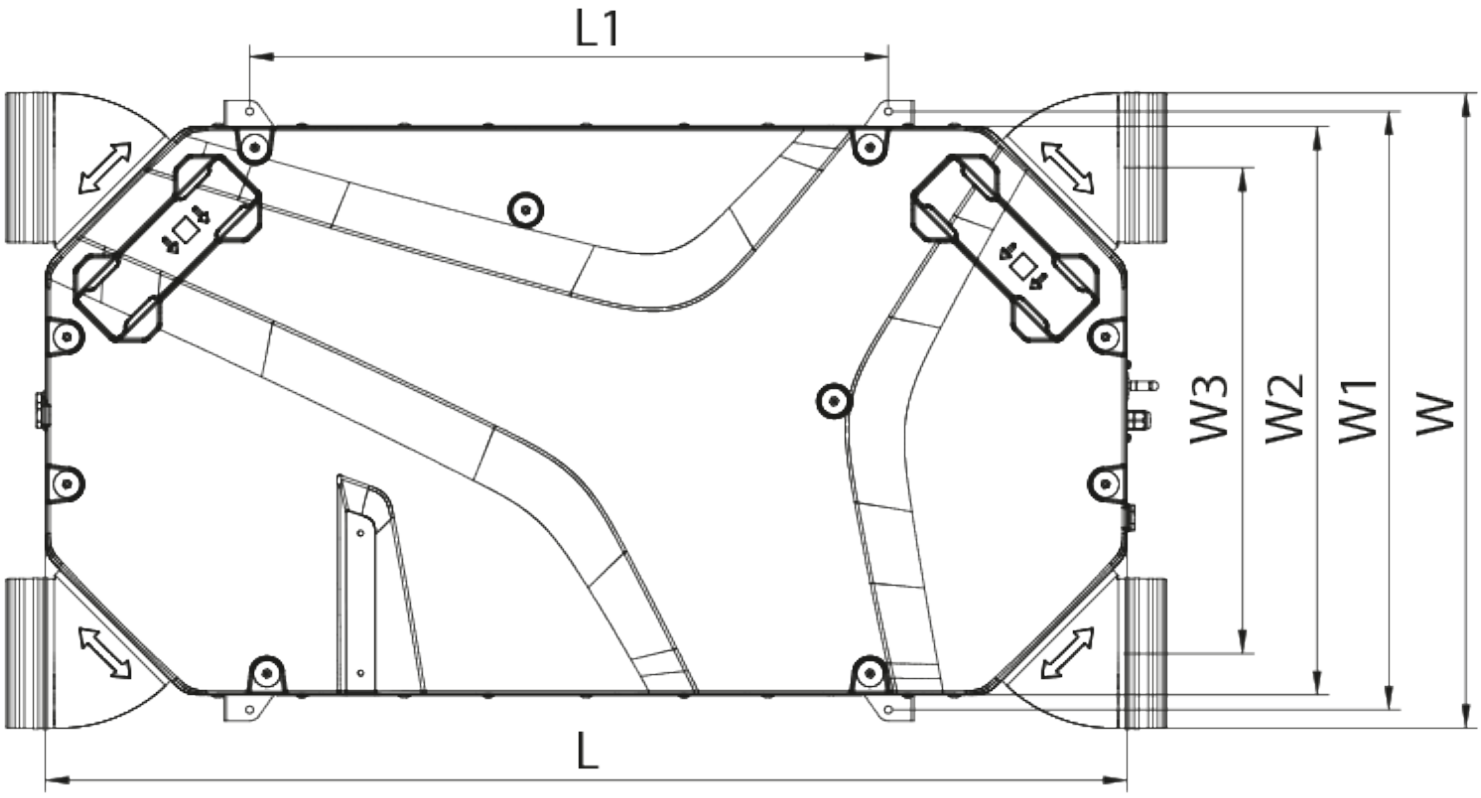
L1
W3
W2
W1
W
L

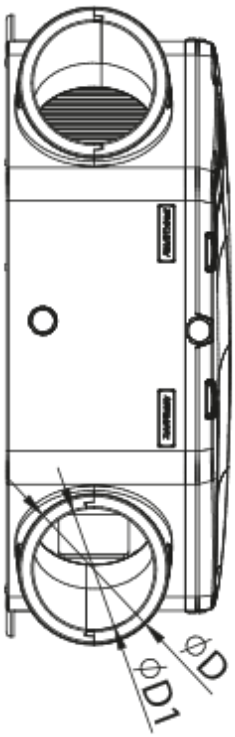
ØD
ØD1

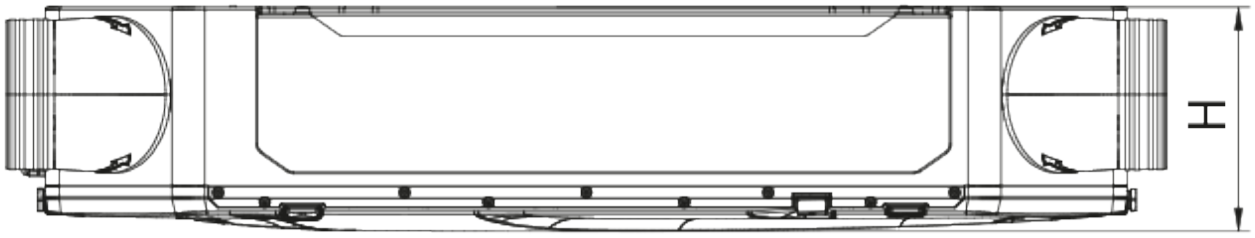

Accessories

Control Panels for AHU

Name	Photo	Description

A25		Touch screen control panel for controlling industrial and residential air handling units
A22		Control panels for controlling industrial and residential air handling units
A22 WiFi		Control panels for controlling industrial and residential air handling units

Sensors

Name	Photo	Description
HV2		Humidity sensor
CO2-1		CO2 sensors
CO2-2		CO2 sensors
HR-S		Electro-mechanical humidistat
CO2-3		CO2 sensor

For round ducts

Name	Photo	Description
SR 160/600		Silencers made of galvanized steel filled with non-combustible sound-absorbing material
SR 160/900		Silencers made of galvanized steel filled with non-combustible sound-absorbing material
SR 160/1200		Silencers made of galvanized steel filled with non-combustible sound-absorbing material

For round ducts

Name	Photo	Description

KRV 160		Air dampers for automatic air flow control in round ducts

Electrical heaters

Name	Photo	Description
NKD 160-0,8-1 A21 V.2		Inline supply air reheaters with external control
NKD 160-1,2-1 A21 V.2		Inline supply air reheaters with external control
NKD 160-1,7-1 A21 V.2		Inline supply air reheaters with external control
NKD 160-2,0-1 A21 V.2		Inline supply air reheaters with external control

Electric actuators

Name	Photo	Description
Belimo TF230		The actuators are designed for controlling air dampers with cross section up to 0.4 m² performing protection functions

Other accessories

Name	Photo	Description
SF 200x165x48 Coarse 60% G4		Panel filter G4
SF 200x165x48 ePM1 65% F7		F7 panel filter