# Enave-T 270 VE A21 L



Vertical air handling units with a counterflow polystyrene or enthalpy heat exchanger

- Power of electrical preheater: 1400
- Sound pressure level LpA at 3 m: 34
- Heat exchanger type: Counter flow
- Heat exchanger material: Enthalpy
- Supply filter: G4 / Coarse > 60% (option F7 / ePM1 60%)
- Extract filter: G4 / Coarse > 60%
- Sound-insulated casing
- Enthalpy heat exchanger
- Bypass: Auto
- Reheater: Optional
- Preheater: Built-in
- BMS protocol: ModBus
- Control: Smartphone
- Casing material: EPP
- Humidity sensor: Optional
- CO2 sensor: Optional
- PM2.5 sensor: Optional

| | Unit of measurement | Enave-T 270 VE A21 L |
|---|---|---|
| Connected air duct size | mm | 125 |
| Phases | - | 1 |
| Minimum supply voltage | V | 230 |
| Maximum supply voltage | V | 230 |
| Power supply frequency | Hz | 50/60 |
| Rated power | W | 182 |
| Power of electrical preheater | W | 1400 |
| Unit current | A | 7.61 |
| Maximum airflow | m³/h | 331 |
| Sound pressure level LpA at 3 m | dB(A) | 34 |
| Heat recovery efficiency, max | % | 83 |
| Heat exchanger type | - | Counter flow |
| Heat exchanger material | - | Enthalpy |
| Weight | kg | 24 |
| Supply filter | - | G4 / Coarse > 60% (option F7 / ePM1 60%) |
| Extract filter | - | G4 / Coarse > 60% |
| Transported air temperature (max) | °C | 40 |
| Transported air temperature (min) | °C | -25 |
| Ambient air temperature min | °C | 1 |

| | | |
|---|---|---|
| Ambient air temperature max | °C | 40 |
| Ingress protection rating | - | IP22 |
| Ambient air humidity max | % | 60 |
| Ingress protection rating of the drive | - | IP44 |

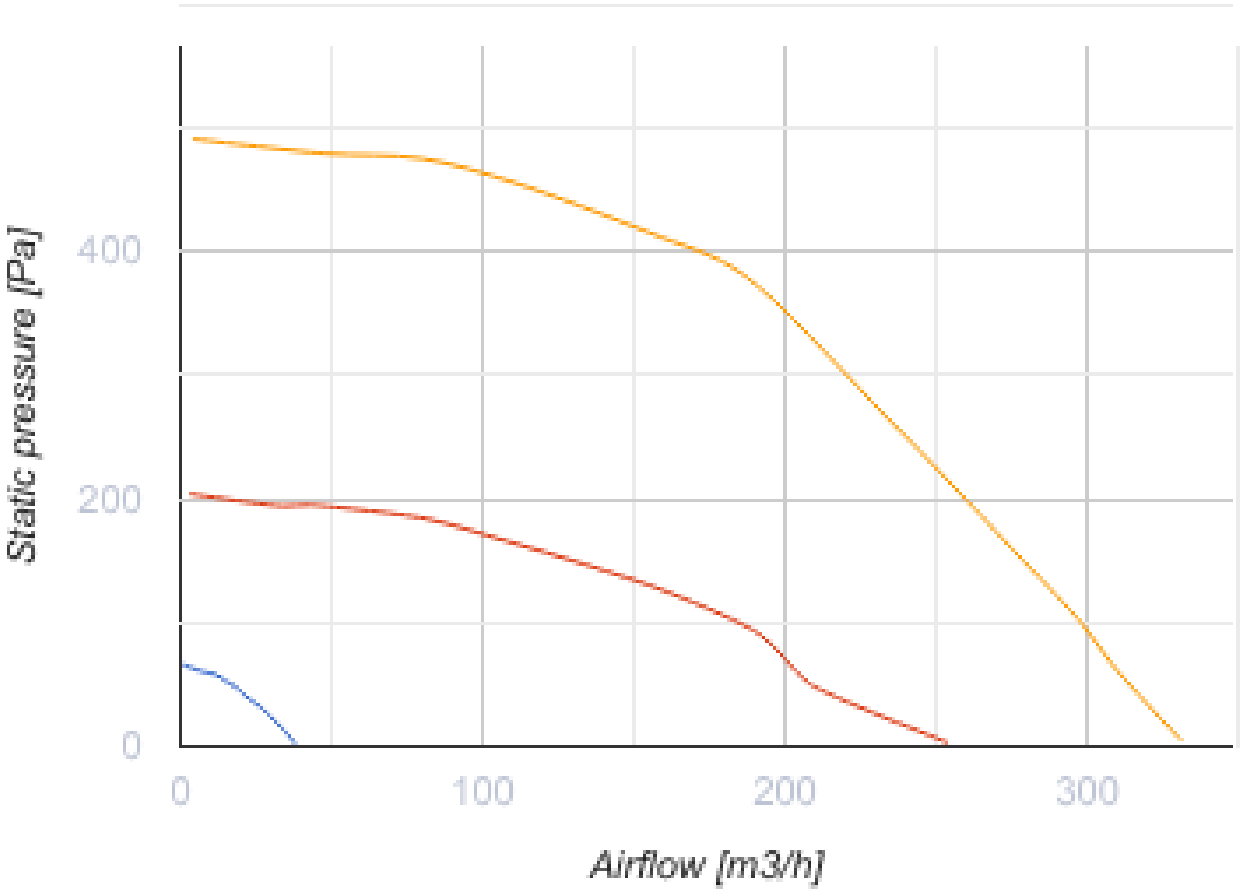


## Dimensions

| D | H | H1 | L | L1 | W | W1 |
|---|---|---|---|---|---|---|
| 125 | 900 | 958 | 452 | 190 | 598 | 273 |

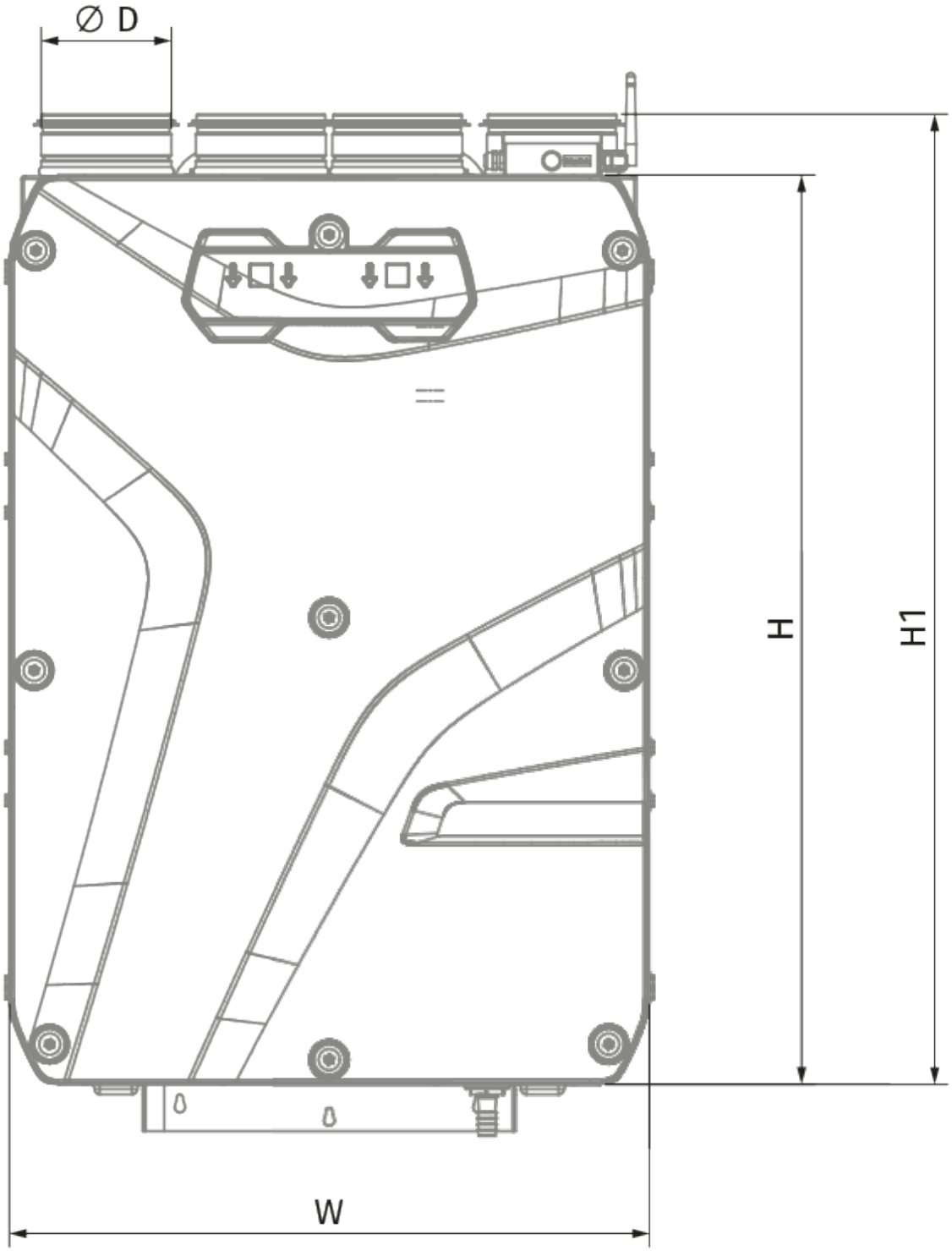
Ø D
H
H1
W

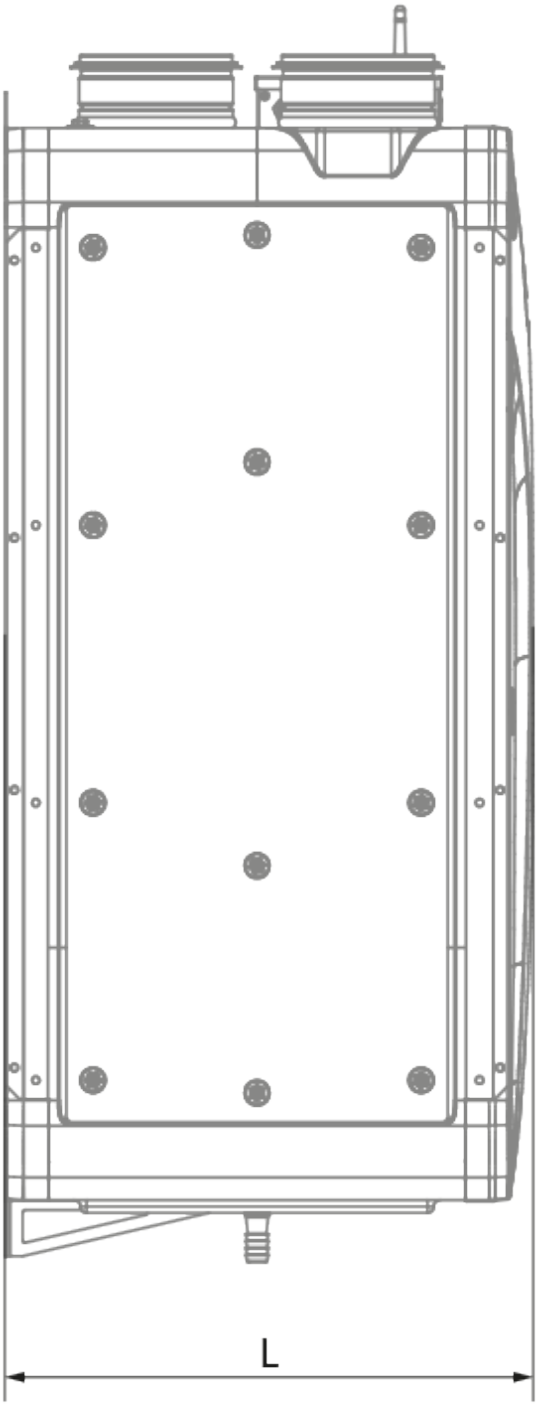
L

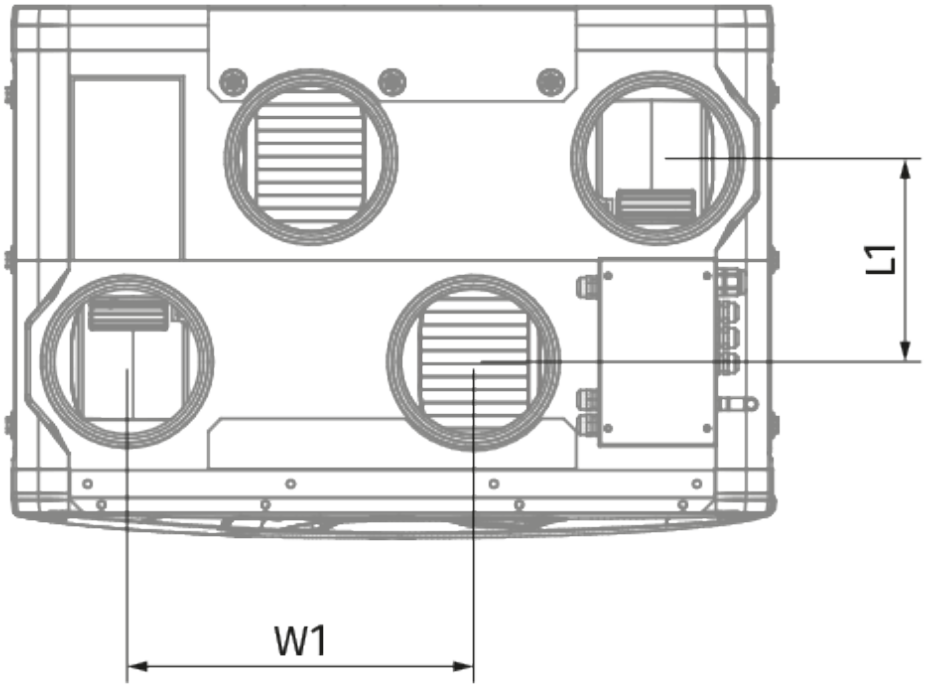


## Accessories

### Control Panels for AHU

| Name | Photo | Description |
|---|---|---|

| | | |
|---|---|---|
| A25 |  | Touch screen control panel for controlling industrial and residential air handling units |
| A22 |  | Control panels for controlling industrial and residential air handling units |
| A22 WiFi |  | Control panels for controlling industrial and residential air handling units |

### Sensors

| Name | Photo | Description |
|---|---|---|
| HV2 |  | Humidity sensor |
| CO2-1 |  | CO2 sensors |
| CO2-2 |  | CO2 sensors |
| HR-S |  | Electro-mechanical humidistat |
| CO2-3 |  | CO2 sensor |

### For round ducts

| Name | Photo | Description |
|---|---|---|
| SR 125/600 |  | Silencers made of galvanized steel filled with non-combustible sound-absorbing material |
| SR 125/900 |  | Silencers made of galvanized steel filled with non-combustible sound-absorbing material |
| SR 125/1200 |  | Silencers made of galvanized steel filled with non-combustible sound-absorbing material |

### For round ducts

| Name | Photo | Description |
|---|---|---|

| | | |
|---|---|---|
| KRV 125 |  | Air dampers for automatic air flow control in round ducts |

### Electrical heaters

| Name | Photo | Description |
|---|---|---|
| NKD 125-0,6-1 A21 V.2 |  | Inline supply air reheaters with external control |
| NKD 125-0,8-1 A21 V.2 |  | Inline supply air reheaters with external control |
| NKD 125-1,2-1 A21 V.2 |  | Inline supply air reheaters with external control |

### Electric actuators

| Name | Photo | Description |
|---|---|---|
| Belimo TF230 |  | The actuators are designed for controlling air dampers with cross section up to 0.4 m² performing protection functions |

### Other accessories

| Name | Photo | Description |
|---|---|---|
| SF 356x100x48 Coarse 90% G4 |  | Panel filter G4 |
| SF 356x100x48 ePM1 65% F7 |  | F7 panel filter |

## Ecodesign

| Trademark | Vents | | | | | |
|---|---|---|---|---|---|---|
| Model | Enave-T 270 VE A21 L | | | | | |
| Specific energy consumption (SEC) (kWh/(m²/a)) | Cold | | Average | | Warm | |
| | -76.5 | A+ | -39.4 | A | -15.5 | E |
| Type of ventilation unit | Bidirectional | | | | | |
| Type of drive installed | Variable speed | | | | | |
| Type of heat recovery system | Recuperative | | | | | |
| Thermal efficiency of heat recovery (%) | 78 | | | | | |
| Maximum flow rate (m³/h) | 298 | | | | | |
| Electric power input (W) | 176 | | | | | |
| Reference flow rate (m³/s) | 0.058 | | | | | |
| Reference pressure difference (Pa) | 50 | | | | | |
| Specific power input (SPI) (W/(m³/h)) | 0.351 | | | | | |
| Control typology | Local demand control | | | | | |
| Maximum internal leakage rates (%) | 2.7 | | | | | |
| Maximum external leakage rates (%) | 2.7 | | | | | |
| Sound power level (dB(A)) | 55 | | | | | |
| The annual electricity consumption (AEC) (kWh/a) | Cold | | Average | | Warm | |
| | 768 | | 231 | | 186 | |
| The annual heating saved (AHS) (kWh/a) | Cold | | Average | | Warm | |
| | 8695 | | 4445 | | 2010 | |