ERV-M-160-P

Small electrically and manually driven centrifugal fan with vertical discharge designed to be installed in ventilation systems of shelters

• Pressure type: Middle pressure

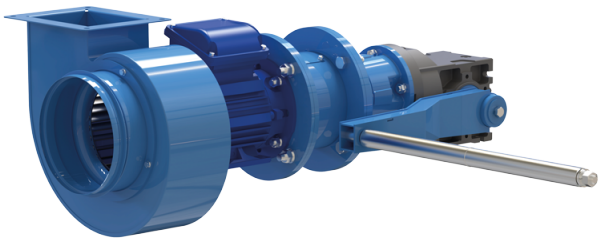

	Unit of measurement	ERV-M-160-P
Phases	-	3
Minimum supply voltage	V	400
Maximum supply voltage	V	400
Power supply frequency	Hz	50
Rated power	W	180
Maximum airflow	m³/h	770
Rotation speed at 50hz	-	1360
Weight	kg	37
Ingress protection rating of the drive	-	IP54
Maximum static pressure	Pa	195
Pressure type	-	Middle pressure

Dimensions

A	A1	A2	B	B1	B2	C	C1	D	n	F	H	h	L
101	127	151	128	156	180	760	110	157	4	320	275	132	715

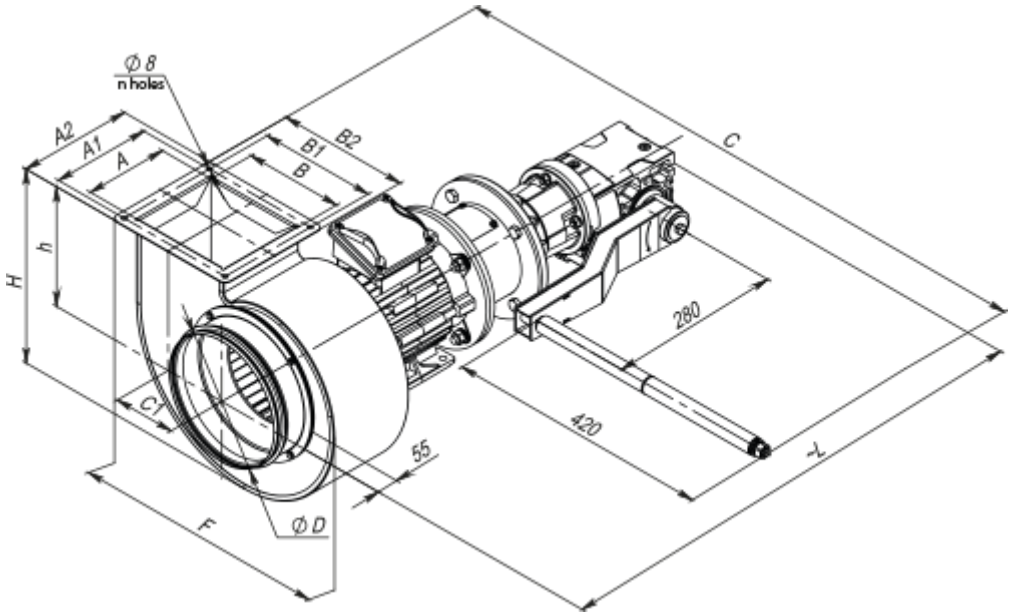

Accessories

For round ducts

Name	Photo	Description
VVG 160	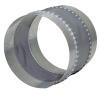	Flexible anti-vibration inserts for round ducts

Mounting frames for ventilation in shelters

Name	Photo	Description
RM-M-160-H		Mounting frame for small electrically and manually driven fan ERV-M

Inserts for ventilation systems

Name	Photo	Description
VVGF-ERV-M-160		Flexible joint

Valves for ventilation in shelters

Name	Photo	Description
VV-PM-1		Flow meter and cut-off valve (rectangular)