ERV-M-200-P

Small electrically and manually driven centrifugal fan with vertical discharge designed to be installed in ventilation systems of shelters

• Pressure type: Middle pressure

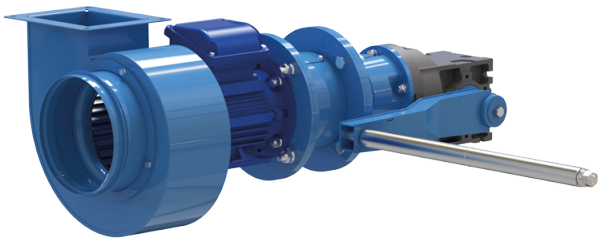

	Unit of measurement	ERV-M-200-P
Phases	-	3
Minimum supply voltage	V	400
Maximum supply voltage	V	400
Power supply frequency	Hz	50
Rated power	W	550
Maximum airflow	m³/h	1650
Rotation speed at 50hz	-	1360
Weight	kg	41
Ingress protection rating of the drive	-	IP54
Maximum static pressure	Pa	330
Pressure type	-	Middle pressure

Dimensions

A	A1	A2	B	B1	B2	C	C1	D	n	F	H	h	L
135	158	182	160	187	211	800	137	197	4	390	335	155	785

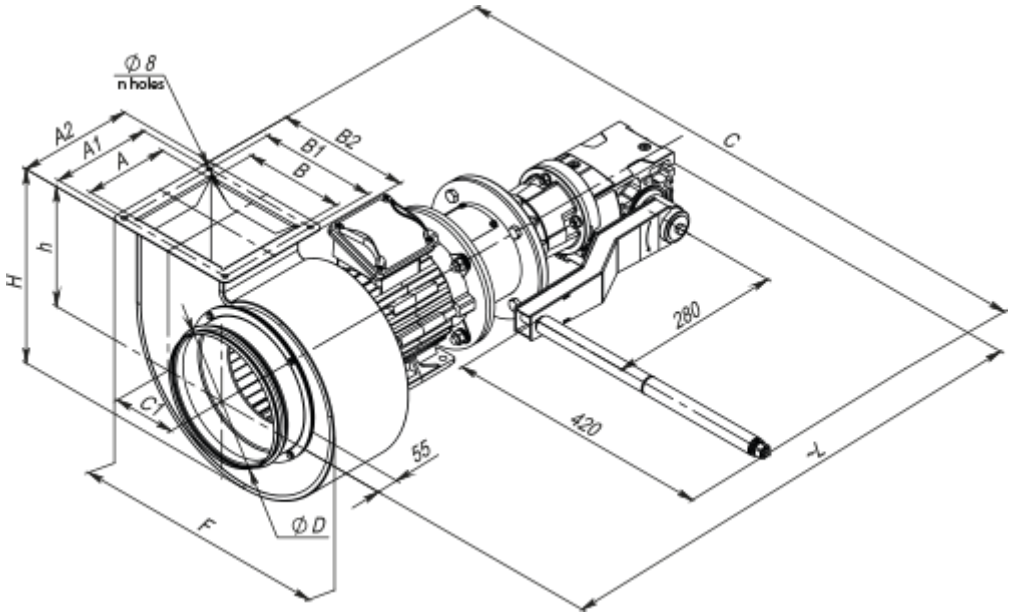

Accessories

For round ducts

Name	Photo	Description
VVG 200	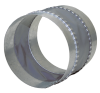	Flexible anti-vibration inserts for round ducts

Mounting frames for ventilation in shelters

Name	Photo	Description
RM-M-200-H		Mounting frame for small electrically and manually driven fan ERV-M

Inserts for ventilation systems

Name	Photo	Description
VVGF-ERV-M-200		Flexible joint

Valves for ventilation in shelters

Name	Photo	Description
VV-PM-3		Flow meter and cut-off valve (rectangular)