ERV-M-240-P

Small electrically and manually driven centrifugal fan with vertical discharge designed to be installed in ventilation systems of shelters

• Pressure type: Middle pressure

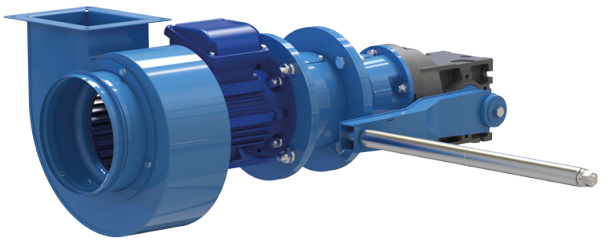

	Unit of measurement	ERV-M-240-P
Phases	-	3
Minimum supply voltage	V	400
Maximum supply voltage	V	400
Power supply frequency	Hz	50
Rated power	W	1500
Maximum airflow	m³/h	2900
Rotation speed at 50hz	-	1420
Weight	kg	52
Ingress protection rating of the drive	-	IP54
Maximum static pressure	Pa	520
Pressure type	-	Middle pressure

Dimensions

A	A1	A2	B	B1	B2	C	C1	D	n	F	H	h	L
171	202	232	200	231	261	860	171	237	8	490	415	190	870

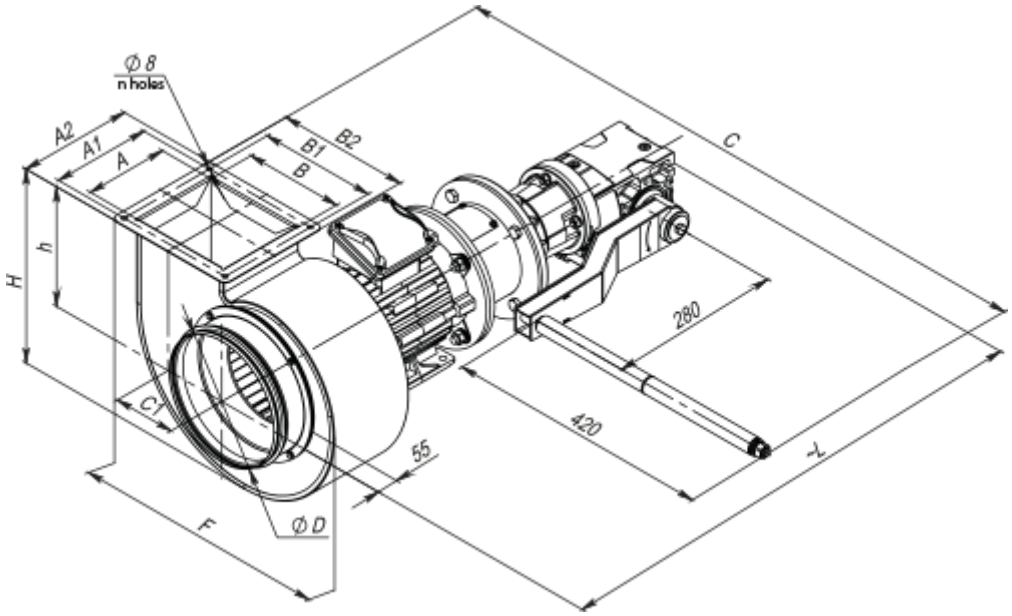

Accessories

For round ducts

Name	Photo	Description
VVG 240	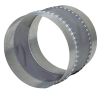	Flexible anti-vibration inserts for round ducts

Mounting frames for ventilation in shelters

Name	Photo	Description
RM-M-240-H		Mounting frame for small electrically and manually driven fan ERV-M

Inserts for ventilation systems

Name	Photo	Description
VVGF-ERV-M-240		Flexible joint

Valves for ventilation in shelters

Name	Photo	Description
VV-PM-5		Flow meter and cut-off valve (rectangular)