FB 400x200



Rectangular panel air filters

- Filter: G4
- Casing material: Galvanized steel

	Unit of measurement	FB 400x200
Weight	kg	2.4
Filter	-	G4

Dimensions

B	B1	B2	H	H1	H2
400	420	440	200	220	240

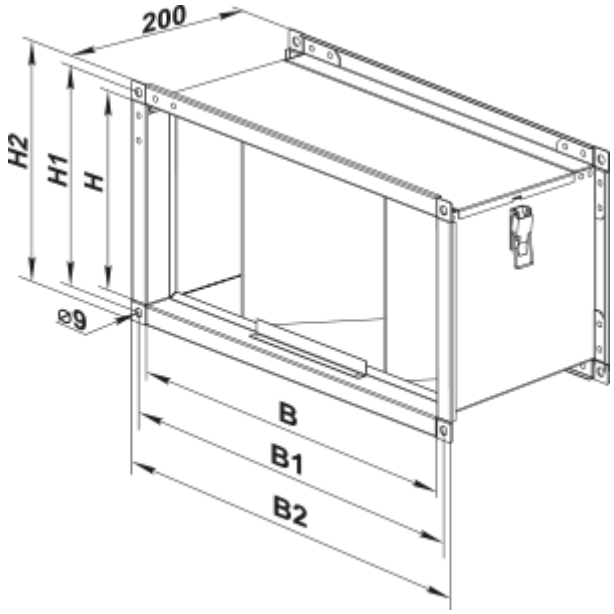
200
H2
H1
H
⌀9
B
B1
B2