FB 600x300



Rectangular panel air filters

- Filter: G4
- Casing material: Galvanized steel

	Unit of measurement	FB 600x300
Weight	kg	5.2
Filter	-	G4

Dimensions

B	B1	B2	H	H1	H2
600	620	640	300	320	340

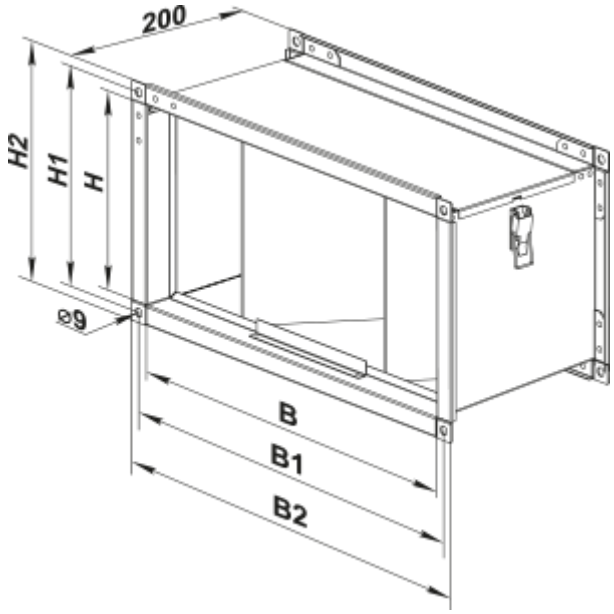
200
H2
H1
H
⌀9
B
B1
B2