FB 800x500



Rectangular panel air filters

- Filter: G4
- Casing material: Galvanized steel

	Unit of measurement	FB 800x500
Weight	kg	7.9
Filter	-	G4

Dimensions

B	B1	B2	H	H1	H2
800	820	840	500	520	540

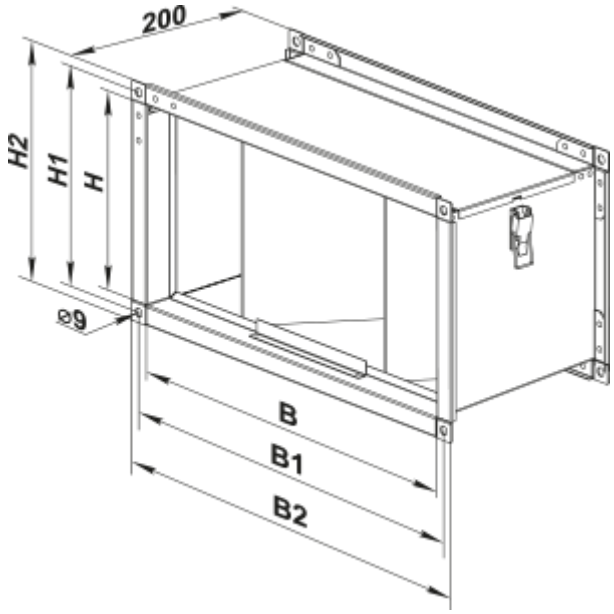
200
H2
H1
H
⌀9
B
B1
B2