# FL 100 LED5 gold 7K (12 V/50 Hz)

Supply and exhaust plastic diffusers with light

• Casing material: Plastic

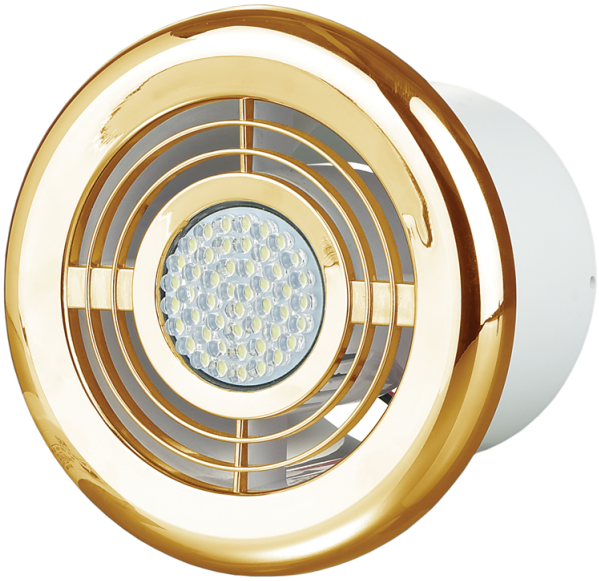

| | Unit of measurement | FL 100 LED5 gold 7K (12 V/50 Hz) |
|---|---|---|
| Connected air duct size | mm | 100 |
| Phases | - | 1 |
| Minimum supply voltage | V | 12 |
| Maximum supply voltage | V | 12 |
| Power supply frequency | Hz | 50 |
| Rated power | W | 5 |
| Ingress protection rating | - | IPX4 |

## Dimensions

| D | D1 | L | L1 |
|---|---|---|---|
| 141 | 99.4 | 87.5 | 15 |

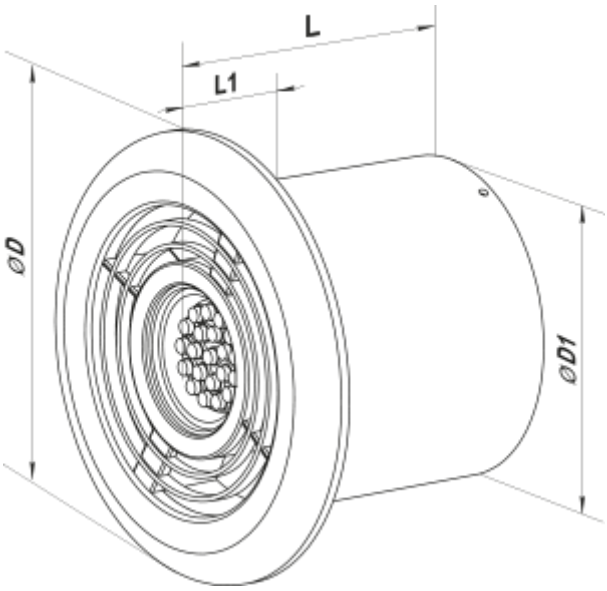
L
L1
ØD
ØD1