FL2 100 LED5 7K (12 V/50 Hz)

Supply and exhaust plastic diffusers with light

• Casing material: Plastic



	Unit of measurement	FL2 100 LED5 7K (12 V/50 Hz)
Connected air duct size	mm	100
Phases	-	1
Minimum supply voltage	V	12
Maximum supply voltage	V	12
Power supply frequency	Hz	50
Rated power	W	5
Ingress protection rating	-	IPX4

Dimensions

D	D1	L	L1
140	97	73.2	13.2

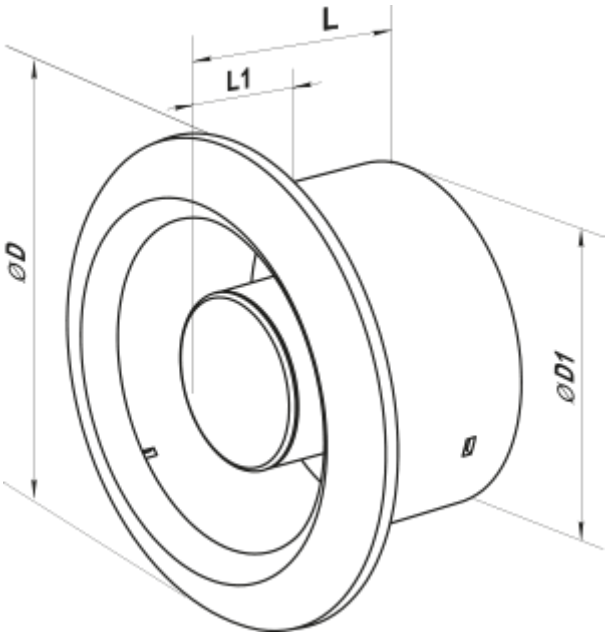
L
L1
ØD
ØD1