# FL2-T 100 LED5 7K

Supply and exhaust plastic diffusers with light

• Casing material: Plastic



| | Unit of measurement | FL2-T 100 LED5 7K |
|---|---|---|
| Connected air duct size | mm | 100 |
| Phases | - | 1 |
| Minimum supply voltage | V | 220 |
| Maximum supply voltage | V | 240 |
| Power supply frequency | Hz | 50 |
| Rated power | W | 5 |
| Ingress protection rating | - | IPX4 |

## Dimensions

| D | D1 | L | L1 |
|---|---|---|---|
| 140 | 97 | 73.2 | 13.2 |

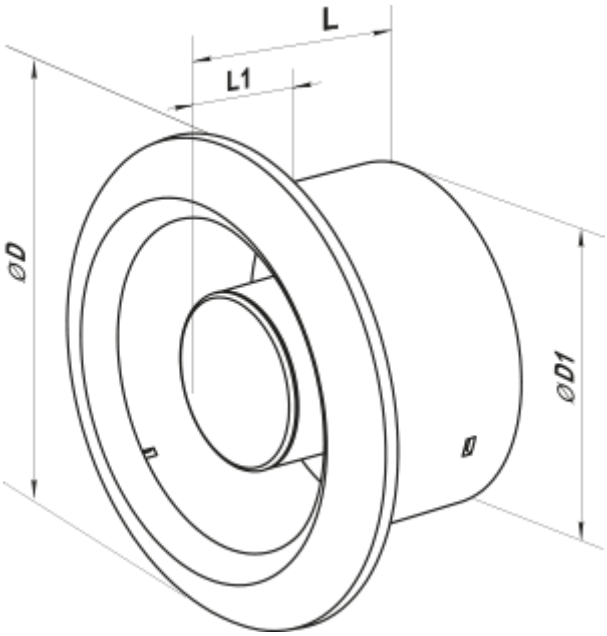
L
L1
ØD
ØD1