FlexiVent 0102635000

Round duct

- Casing material: HDPE

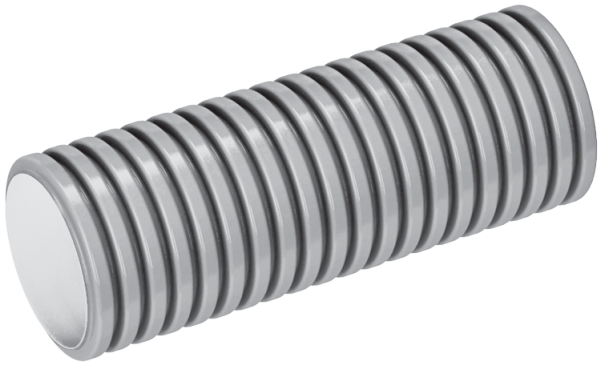

	Unit of measurement	FlexiVent 0102635000
Connected air duct size	mm	63
Ambient air temperature min	°C	-20
Ambient air temperature max	°C	60

Dimensions

D	D1	L
63	51	50000

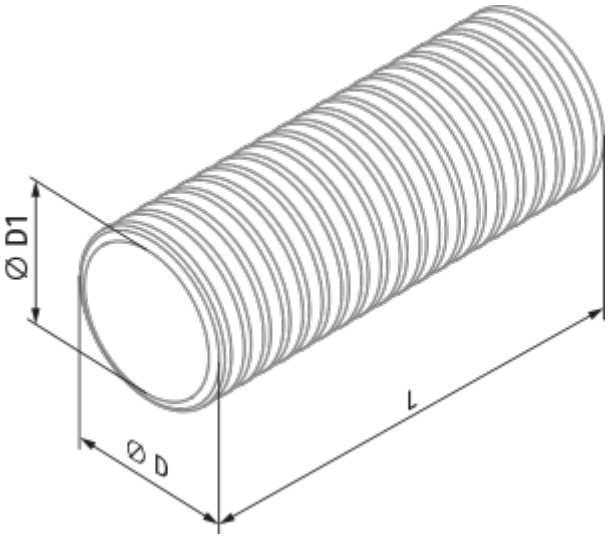
Ø D1
Ø D
L