FlexiVent 060152

For connection of the air ducts to the connectors and air distribution boxes

- Casing material: Polypropylene

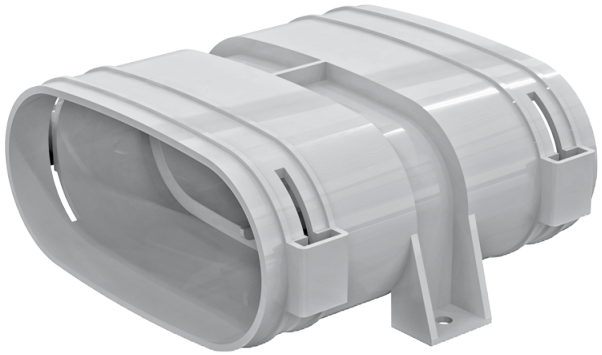

	Unit of measurement	FlexiVent 060152
Connected air duct size	mm	52
Ambient air temperature max	°C	60
Ambient air temperature min	°C	-20

Dimensions

H	L	W
63	130	145

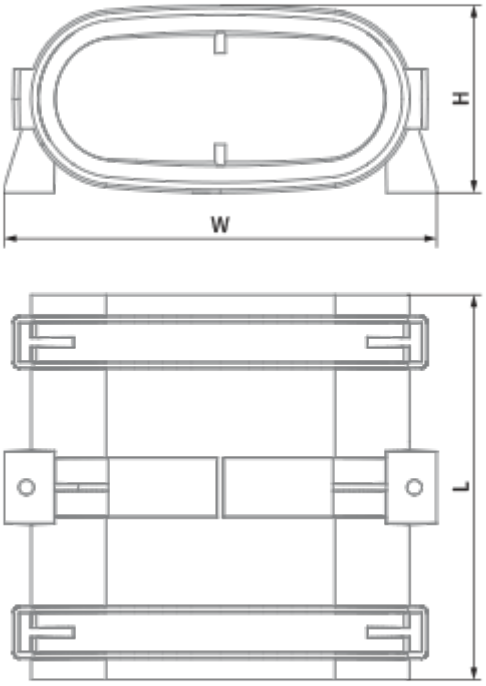
H
W
L