FlexiVent 0810125/75x3

For supply and exhaust systems in residential premises. Connecting the ventilation grille to ∅ 75 mm ducts

• Casing material: Polypropylene



	Unit of measurement	FlexiVent 0810125/75x3
Connected air duct size	mm	75
Ambient air temperature max	°C	60
Ambient air temperature min	°C	-20

Dimensions

∅ d	H1	H2	L	W
127	183	100	243	266

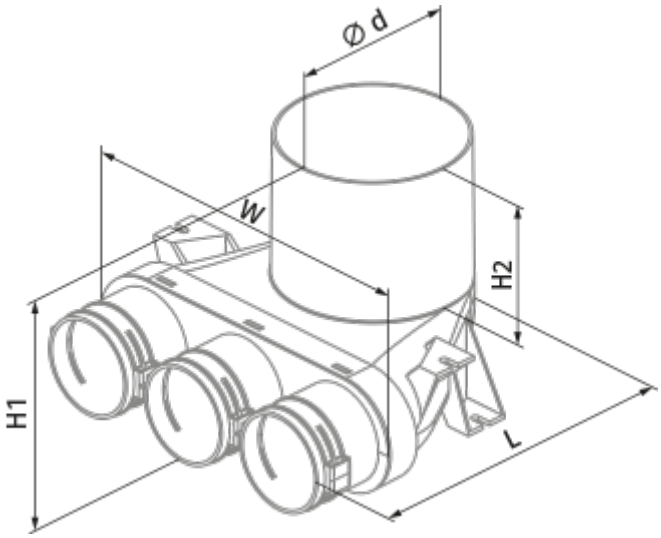
Ø d
W
H2
H1
L