# FlexiVent 0821300x100/63x2

For supply and exhaust systems in residential premises. Connecting the ventilation grille to ∅ 63 mm ducts

• Casing material: Metal

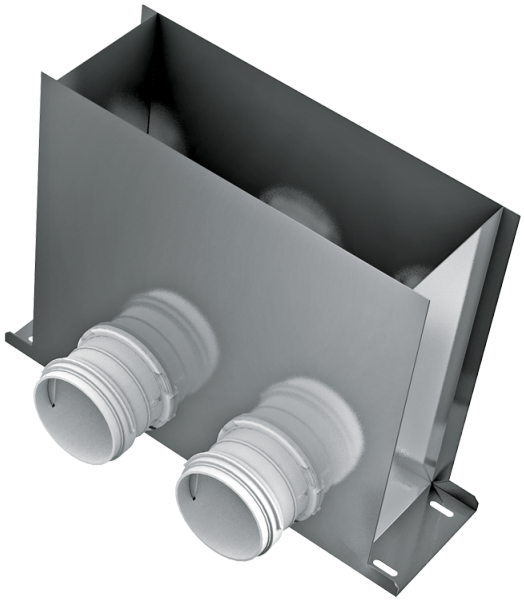

| | Unit of measurement | FlexiVent 0821300x100/63x2 |
|---|---|---|
| Connected air duct size | mm | 63 |

## Dimensions

| ∅ D | H | L | W |
|---|---|---|---|
| 72 | 300 | 401 | 115 |

