FlexiVent 0821300x100/75x2

For supply and exhaust systems in residential premises. Connecting the ventilation grille to ∅ 75 mm ducts

- Casing material: Metal

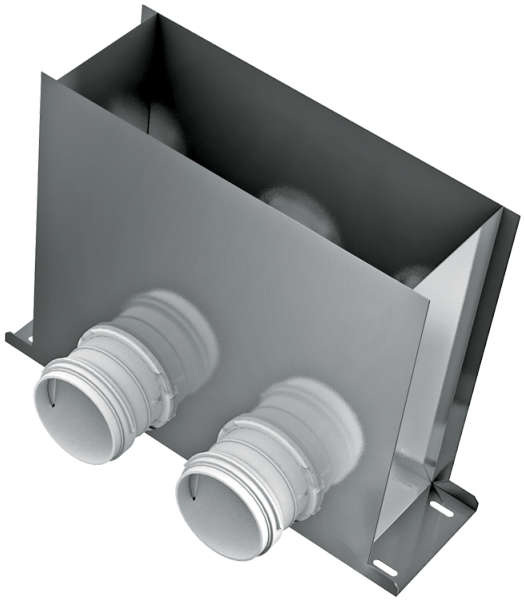

	Unit of measurement	FlexiVent 0821300x100/75x2
Connected air duct size	mm	75

Dimensions

∅ D	H	L	W
84	300	401	115

