FlexiVent 0821300x100/90x2



For supply and exhaust systems in residential premises. Connecting the ventilation grille to ∅ 90 mm ducts

• Casing material: Metal

	Unit of measurement	FlexiVent 0821300x100/90x2
Connected air duct size	mm	90

Dimensions

H	L	W	W1
300	401	115	181

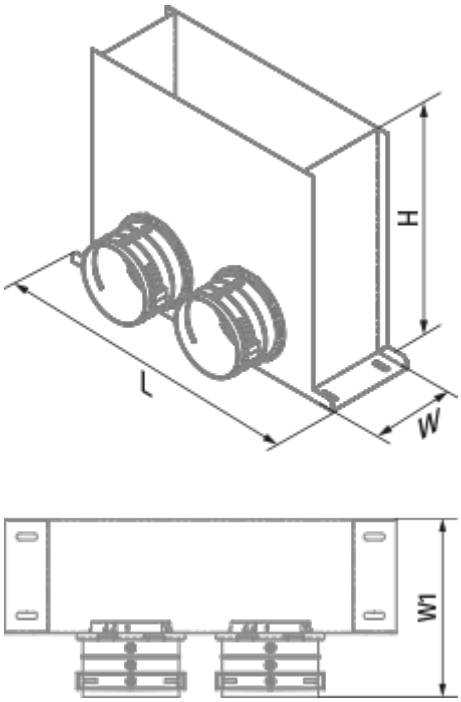
H
L
W

W1