FlexiVent 0832300x55/63x3

For supply and exhaust systems in residential premises. Connecting the ventilation grille to ∅ 63 mm ducts

• Casing material: Metal

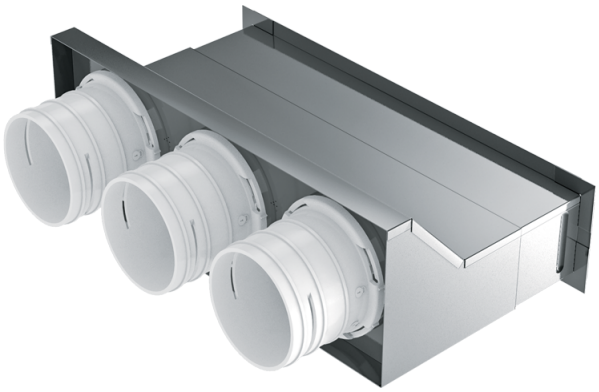

	Unit of measurement	FlexiVent 0832300x55/63x3
Connected air duct size	mm	63

Dimensions

∅ D	H	H1	L	W
72	112	75	304	172

