# FlexiVent 1002125/90x6

Supply or exhaust ventilation systems of residential spaces. For distribution of air from the ventilation unit through the air ducts

• Casing material: Aluzinc



| | Unit of measurement | FlexiVent 1002125/90x6 |
|---|---|---|
| Connected air duct size | mm | 90 |

## Dimensions

| Ø D | H | L | W |
|---|---|---|---|
| 122 | 239 | 348 | 432 |

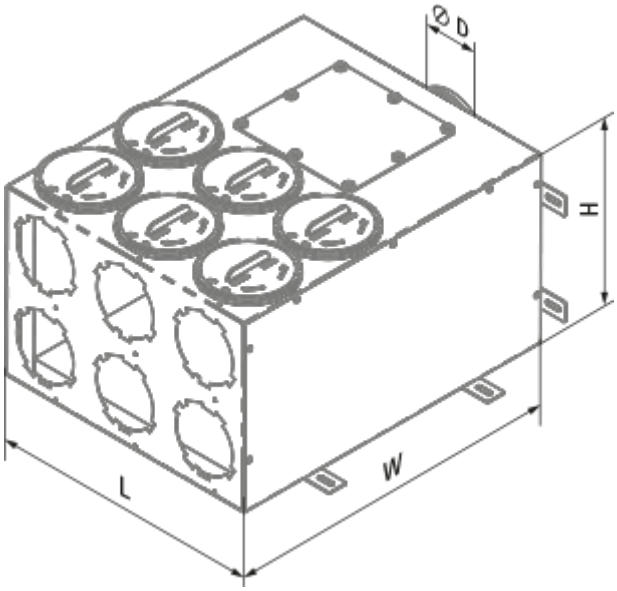
Ø D
H
L
W